The Register People®

CONTINENTAL INDUSTRIES, INC.

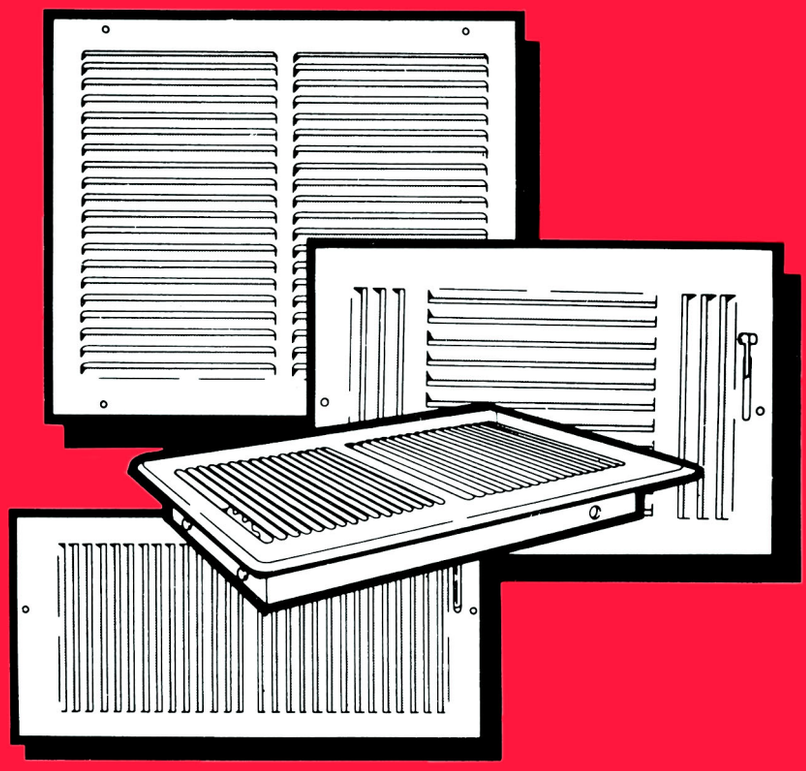

Your All-American Register, Grille & Diffuser Company

Contents Reference Guide
Floor Registers & Grilles
Baseboard Diffusers & Grilles
Sidewall/Ceiling Registers
Curved Blade Registers
Square & Round Diffusers
Return Air Grilles
Return Air Filter Grilles
Commercial Difusers & Grilles
Commmercial T-Bar Diffusers & Grilles
T Bar Collars & Dampers, Accessory Parts
Terms & Definitions

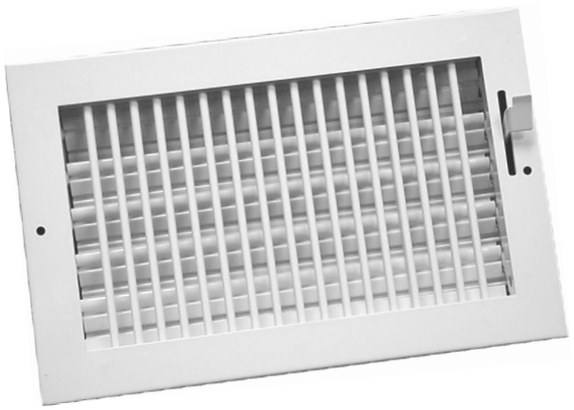

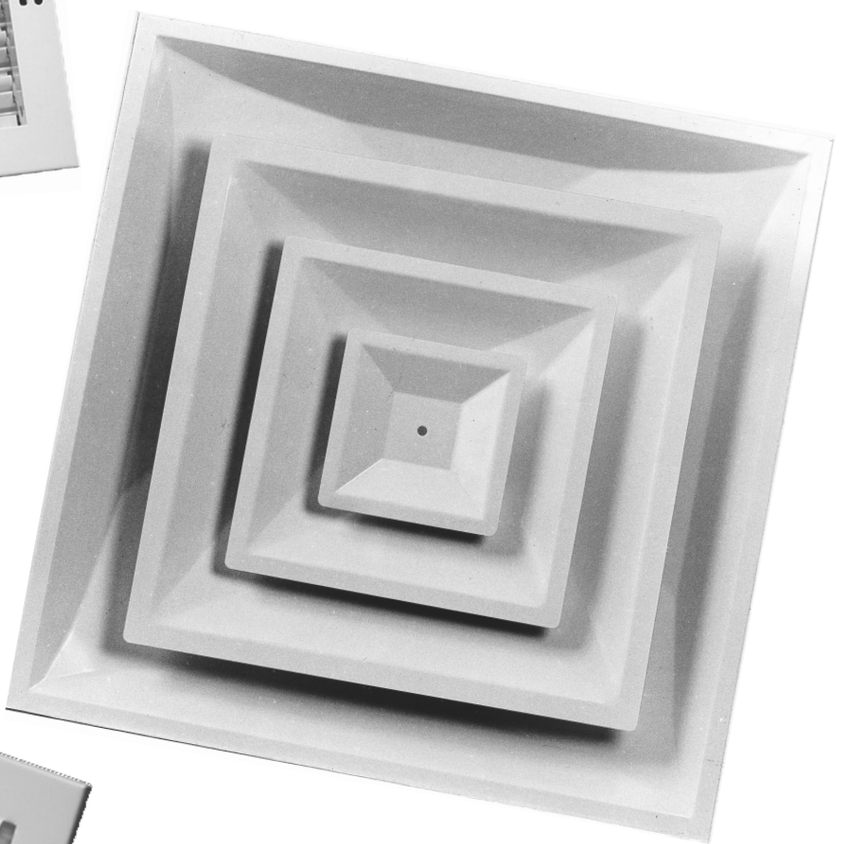

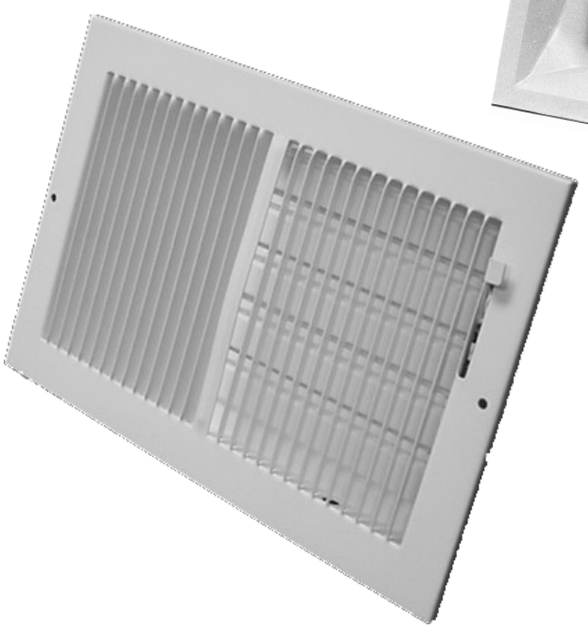

CONTINENTAL

The Register People®

Proudly Made in the U.S.A.

Continental Industries, Inc. is driven by a singular vision of quality. It is a vision clearly demonstrated by well-designed, engineered and manufactured products, conscientious customer service, and long-term relationships with valued customers and suppliers. This vision will continue to be driven by the young and upcoming generations eager to continue the traditions set forth over 100 years ago.

With roots dating to 1892, the company has become a major, multifaceted manufacturer, offering the broadest line of premier registers, grilles, diffusers and accessories for each of the major industry segments it serves.

www.TheRegisterPeople.com e-mail: crc@TheRegisterPeople.com

INDEX
I. Residential Steel & Aluminum Products

Series	Description	Pg. #
28	Floor Perimeter Registers	1
T32	Toe Space Registers	2
51	Toe Space Registers	2
TG32	Toe Space Grilles	3
F20	Bar Faced Floor Registers	4
F25	Bar Faced Floor Grilles	5
150/180/240	Sunburst Baseboard Diffusers	7
1505/1805/2405	Sunburst Baseboards Returns	7
B22	Baseboard Diffusers 1/2” Spaced Fins	8
B32	Baseboard Diffusers 1/3” Spaced Fins	8
BG21	Baseboard Grilles 1/2” Spaced Fins	9
BG31	Baseboard Grilles 1/3” Spaced Fins	11
BEG21	Extended Baseboard Grilles1/2” Spaced Fins	12
BEG31	Extended Baseboard Grilles 1/3” Spaced Fins	14
51	Baseboard/Sidewall Diffusers	15
54	Baseboard Diffusers 1/3” Spaced Fins	16
55	Extended Baseboard Diffusers	17
21	1-Way Sidewall/Ceiling Registers1/2” Spaced Fins	18
22/A22	2-Way Sidewall/Ceiling Registers 1/2” Spaced Fins	19
23/A23	3-Way Sidewall/Ceiling Registers 1/2” Spaced Fins	20
24/A24	4-Way Sidewall/Ceiling Registers 1/2” Spaced Fins	22
244	4-Way Sidewall/Ceiling Registers 1/2” Spaced Fins	23
32	2-Way Sidewall/Ceiling Registers 1/3” Spaced Fins	24
33	3-Way Sidewall/Ceiling Registers 1/3” Spaced Fins	26
34	4-Way Sidewall/Ceiling Registers 1/3” Spaced Fins	28
C1H/AC1H	1-Way Curved Blade Sidewall/Ceiling Registers	29
C2H/AC2H	2-Way Curved Blade Sidewall/Ceiling Registers	31
C3/AC3	3-Way Curved Blade Sidewall/Ceiling Registers	33
C4/AC4	4-Way Curved Blade Sidewall/Ceiling Registers	35
C44/AC44	4-Way Curved Blade Sidewall/Ceiling Registers	36
16	Round Ceiling Diffusers	37
12B	Round Butterfly Dampers for #16 Round Diffuser	38
11	Round Duct Rings for #16 Round Diffuser	38
P19	Composite Square Ceiling Diffuser/Dampers All In One	39
P20	Composite Round Ceiling Diffuser/Dampers All In One	41
P19 & P20	Accessory Parts	41
PPF	Plaster Frames	42
PLIP	Lay In Panels	42
G25/A25	Return Air Grilles 1/2” Spaced fins	43
G35	Return Air Grilles 1/3” Spaced fins	45
G25/A25 & G35	Mounting Hole Positioning Chart	47
FG2	Filter Grilles 1/2” Spaced fins	48
FG3	Filter Grilles 1/3” Spaced fins	49
CC	Clothes Chute Doors (CCO)	51
CC	Clothes Chute Doors (CCI)	51

Cross Reference Guide

AUER REGISTER	H & C	MILCOR LIMA	AIRMATE	AMERICAN METALS	US-AIRE	CONTINENTAL REGISTER CO.	PAGE NO.
28	421	41	300	413	1510D	28	1
T32						T32	2
51				323		51	2
TG32	420	41F	301	427	1320	TG32	3
F20	210		325	400	1530M	F20	4
F25	265	35	325	405	1530	F25	5
150,180,240	406, 462	71 15,71 18	350	3015, 3018	1340	150,180,240	7
1505,1805,2405	407	73 15, 73 18	351		341	1505,1805,2405	7
B22					108	B22	8
B32	664		164	367		B32	8
BG21			171		1300	BG21	9
BG31	657	20	174	375		BG31	11
BEG21						BEG21	12
BEG31	658			173		BEG31	14
51	651			153		51	15
54	654			165		54	16
55	655					55	17
21	681					21	18
22/A22	682	10V	160	382	1102M	22/A22	19
23/A23	683	10T	140	383	1103M	23/A23	20
24/A24	684	11E	190	384	1104M	24/A24	22
244						244	23
32	661		163	356	1132	32	24
33	631		143	357	1133	33	26
34	621		193		1134	34	28
C1H/AC1H	301/A301	11AB	601M/A601M	361	1201M	C1H/AC1H	29
C2H/AC2H	302/A302	11BB	602M/A602M	362	1202M	C2H/AC2H	31
C3/AC3	303/A303	11DB	603M/A603M	363	1203M	C3/AC3	33
C4/AC4		11EB	604M/A604M	364	1204M	C4/AC4	35
C44/AC44	304/A304					C44/AC44	36
16	16	65	800	1500	4450	16	37
12B	12	68	800D	1800	9250	12B	38
11	11	67	800R	1900		11	38
P19						P19	39
P20						P20	41
P19 & P2O						P19 & P2O	41
PPF						PPF	42
PLIP						PLIP	42
G25/A25	672	19H/19V	170	372	1400	G25/A25	43
G35	650	16H	173	377	110	G35	45
G25/A25/G35						G25/A25/G35	47
FG2	673	19FG	170FF	326	1400F	FG2	48
FG3	659		176FF			FG3	49
CC						CC	51
CC						CC	51

INDEX (cont'd)
I. Commercial Steel & Aluminum Products

Series	Description	Pg. #
RVML	Adjustable Vertical Blade Sidewall/Ceiling Registers	52
RHML	Adjustable Horizontal Blade Sidewall/Ceiling Registers	55
RGV	Adjustable Vertical Blade Sidewall/Ceiling Return Grilles	57
RGV-O	Adjustable Vertical Blade Sidewall/Ceiling Supply Grilles	57
RGH	Adjustable Horizontal Blade Sidewall/Ceiling Supply Grilles	60
RGH-O	Fixed Blade 0½ Horizontal Sidewall/Ceiling Supply Grilles	60
RGH-40	Fixed Blade 40½ Horizontal Sidewall/Ceiling Return Grilles	62
HVG	Adjustable Double Deflection Sidewall/Ceiling Supply Grilles	64
VHG	Adjustable Double Deflection Sidewall/Ceiling Supply Grilles	66
PM	T-Bar Steel Ceiling Plenums	68
P	T-Bar Fiberglass Ceiling Plenums	68
LIP	Lay-In Panels	68
HVS	High Volume T-Bar Diffusers	69
BHV	High Volume T-Bar Diffusers	70
FPD	Fixed Pattern High Volume T-Bar Diffusers	71
PDS/PDS6	Perforated T-Bar Ceiling Diffusers	73
T	T-Bar Filter Grilles	74
6500	T-Bar Series Perforated Diffusers	76
6800	T-Bar Series Perforated Diffusers with 4-Way Curved Blade Registers	77
CS	T-Bar Series Perforated Diffusers with R6 Fiberglass Plenums	79
RDF	Removable Drop Face Perforated Diffusers, 3/8" Drop	81
RFF	Removable Flush Face Perforated Diffusers	82
CS244/CS344	4-Way Louvered T-Bar Diffusers	84
440	Surflo™ T-Bar Ceiling Diffusers with Steel Plenum	85
CS440	Surflo™ T-Bar Ceiling Diffusers with R6 Fiberglass Plenum	87
4406	Surflo™ T-Bar Ceiling Diffusers with R6 Insulated Steel Plenum	90
3700	Butterfly Dampers for Pre-Fab (Spin-in) Top Collars	92
3800	Butterfly Dampers for 5400 Series Collar	92
5400	Collar for T-Bar diffusers and 3700 or 3800 Series Dampers	93
Miscellaneous Parts Listing		94
Symbols		94
Recommended Velocities/Noise Criteria Chart		96
Terms & Definitions		97

Over a Century of Quality

Shipping address: 100 West Windsor Avenue • Elkhart, IN 46514
Mailing address: P.O. Box 1248 • Elkhart, IN 46515-1248
Ph: 574-262-4511 • Toll Free 800-735-5272 • Fax 574-262-2075
www.TheRegisterPeople.com • e-mail: crc@TheRegisterPeople.com

REMEMBER OUR GOALS ARE: QUALITY • SERVICE • VALUE • DELIVERY

Cross Reference Guide (cont'd)

AUER REGISTER	H & C	MILCOR LIMA	AIRMATE	AMERICAN METALS	US-AIRE	CONTINENTAL REGISTER CO.	PAGE NO.
RVML	821	100M	220V			RVML	52
RHML	831		220H			RHML	55
RGV	92VOO		200V			RGV	57
RGV-0	93					RGV-0	57
RGH	92HOO	100H	200H			RGH	60
RGH-0	94					RGH-0	60
RGH-40	94A	100HF	280			RGH-40	62
HVG	92HVO		240H			HVG	64
VHG	92VHO	100VH	240V			VHG	66
PM						PM	68
P						P	68
LIP						LIP	68
HVS	HVS		1300INS	6400	4800	HVS	69
BHV	FPD3	804	1300			BHV	70
FPD	FPD		TC1300		4700	FPD	71
PDS/PDS6	PDSD	80		6100	4300	PDS/PDS6	73
T	659T		TB 170 FF	326PT	1400FTB	T	74
6500						6500	76
6800						6800	77
CS	RENPS	88	770R	6000	4100	CS	79
RDF						RDF	81
RFF	RFP		2102		4350	RFF	82
CS244/CS344						CS244/CS344	84
440		440CGM	2200			440	85
CS440	REN4	440CGS				CS440	87
4406						4406	90
3700				1700	9250	3700	92
3800	3800				9200	3800	92
5400	5400			5000		5400	93

NOTE: This guide is meant for use as a general reference guide only.
Continental Register Co. assumes no liability or responsibility as to accuracy or omissions.

CONTINENTAL REGISTER * METALINE, established in 1955, along with **AUER REGISTER,** purchased in 1997, takes pride in manufacturing the best value registers and grilles for both residential and light commercial needs in the warm air heating and air conditioning industry.

In the event that our products or any parts thereof should prove to be defective in material or workmanship, under normal use and service, we will repair or replace, at our option, whatever is necessary to eliminate the defect. We assume no responsibility for incidental or consequential damages arising from defective products. Nor do we assume any responsibility for failures, breakage, or cost which results from abuse, abnormal use, misuse, negligence or accident or causes other than the above described. Except as stated above, we make no warranties, either expressed or implied, as to any matter whatsoever, including, without limitation, the condition of our products, their merchantability or fitness for any particular purpose.

ENGINEERING INTRODUCTION

System balancing is essential for any heating/cooling air distribution system to perform to plans and specifications, delivering the required amount of air through each register or diffuser. The terminal velocity is a critical element in system balancing and will have a major effect on the throws listed. The terminal velocity is listed for each product, at the bottom of the engineering charts. Symbols and a glossary of terms and definitions used throughout the engineering catalog can be found on pages 95, 96 & 97.

Method of measurement for a supply:
Using the Alnor series 2220A velometer and jet probe identified on the air measurement supply chart (fig.#1), position the velometer probe flush to the register or diffuser face bars and centered in the opening. Removeable quide fins are provided with the probe to accurately position the probe vertically, horizontially and radially. Obtain at least four (4) face velocity or outlet velocity (Vk) readings in the face areas not to exceed an 6" x 6" area. The average face velocity or outlet velocity in feet per minute (FPM) is used in the equation: CFM=Ak X Vk

AIR MEASUREMENT SUPPLY

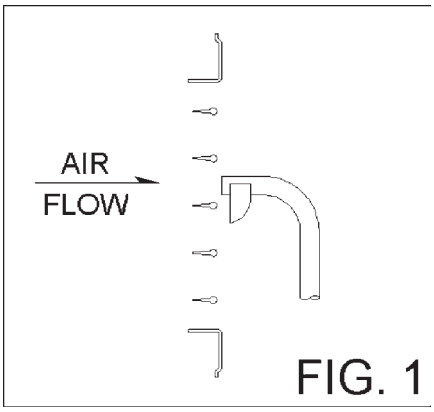

FIG. 1

Method of measurement for returns:
Using the Alnor series 2220A velometer and jet probe indentified on the air measurement return chart (fig.#2), position the probe at a distance of 1" from the face of the grille for accurate readings. A position guage is usually attached to the probe to accurately measure a minimum of four (4) readings.

AIR MEASUREMENT RETURNS

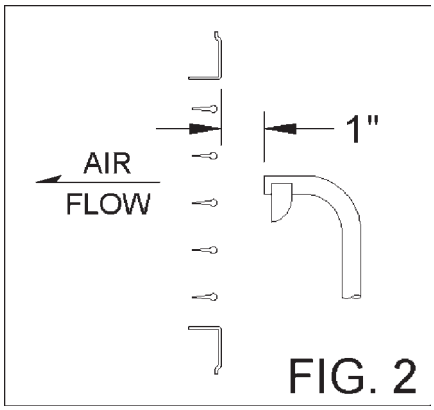

FIG. 2

Applying the Engineering data:
Select the locations and style of registers to be used. Locate the engineering chart for the particular style of register and select a size that deliverers the required CFM at a velocity that is recommended for the particular application or throw requirement. Noise increases with increasing velocities. If the CFM is constant an increase in either the register size or the number of registers of a given size will decrease the velocity, throw and related noise.

No single style of supply register or diffuser will provide optium air distribution for year around air conditioning since the selected register style and outlet for one season will be a compromise for the other season. The success of an air supply system is dependent almost entirely of the location of the supply registers or diffusers. The location of return air grilles is less critical. Return air flow only affects the room air motion in the immediate vicinity of a return air grille.

Section I

Residential Steel/Aluminum

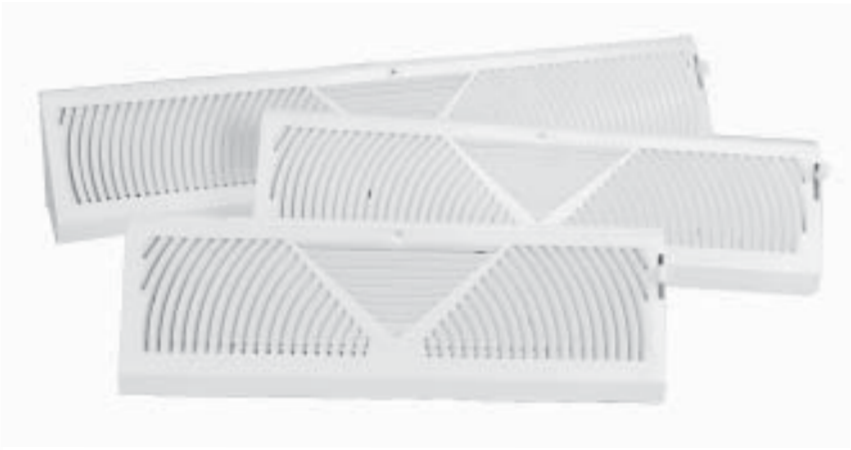

28 FLOOR PERIMETER REGISTERS

Steel Construction
Opposed Blade Damper
Rolled Face
Golden Brown
or White Finish
Reinforced for Strength

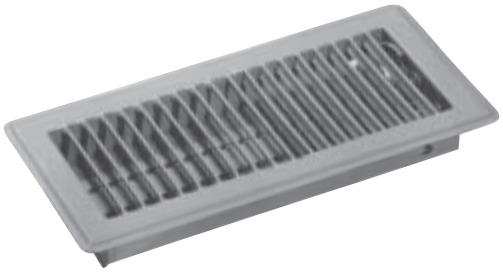

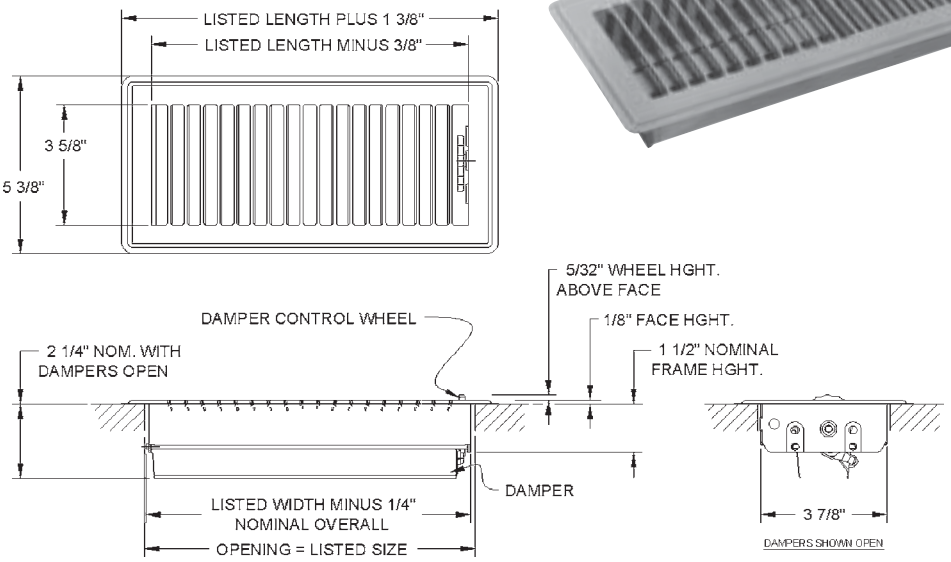

28 SERIES FLOOR PERIMETER REGISTERS

UNIT SIZE	OVERALL SIZE	FACE VELOCITY	300	400	500	600	700	800	900	1000
		PRESSURE LOSS	.006	.010	.016	.022	.031	.040	.050	.062
2 1/4 x 10	3 5/8 x 11 3/8	Cfm	29	38	48	58	68	77	87	97
Ak .097		Throw	2	3	3.5	4	4.5	5	6	6.5
		Spread	3.5	4.5	5	6.5	7.5	8.5	10	11
2 1/4 x 12	3 5/8 x 13 3/8	Cfm	35	47	59	70	82	94	106	118
Ak .118		Throw	2	3	3.5	4	4.5	5.5	6	7
		Spread	3.5	5	5	7	8	10	11	12
2 1/4 x 14	3 5/8 x 15 3/8	Cfm	39	52	65	79	92	105	118	131
Ak .132		Throw	2.5	3	3.5	4.5	5	6	6.5	7.5
		Spread	3.5	4.5	6	7	8.5	10	11.5	12.5
4 x 8	5 3/8 x 9 3/8	Cfm	41	55	69	83	97	111	124	138
Ak .139		Throw	2	2.5	3	3.5	4	4.5	5	6
		Spread	3	4	5	6	7	8	9	10
4 x 10	5 3/8 x 11 3/8	Cfm	52	69	86	104	121	138	156	173
Ak .174		Throw	2.5	3	4	4.5	5.5	6.5	7	8
		Spread	4	4.5	6.5	8.5	9.5	11	12.5	14
4 x 12	5 3/8 x 13 3/8	Cfm	62	83	104	124	145	166	187	208
Ak .208		Throw	2.5	3.5	4	5.5	6	7	8	8.5
		Spread	4	6	7.5	9	10.5	12	13.5	15.5
4 x 14	5 3/8 x 15 3/8	Cfm	72	97	121	145	170	194	218	243
Ak .243		Throw	3	4	5	6	7	7.5	8.5	9.5
		Spread	4.5	6.5	8.5	9.5	11.5	13	14	16.5
6 x 6	7 3/8 x 7 3/8	Cfm	46	61	77	93	109	124	139	155
Ak .139		Throw	2.2	2.8	3.3	3.9	4.5	5.1	5.6	6.7
		Spread	3.3	4.5	5.6	6.7	7.8	9	10.1	11.2
6 x 8	7 3/8 x 9 3/8	Cfm	57	77	96	115	134	154	173	193
Ak .194		Throw	2.3	3.2	3.7	5.1	5.5	6.5	7.4	7.9
		Spread	3.7	5.5	6.9	8.3	9.7	11.1	12.5	14.4
6 x 10	7 3/8 x 11 3/8	Cfm	80	110	135	160	190	215	245	270
Ak .243		Throw	3.5	4.5	6	7	8	9	10.5	11.5
		Spread	6	8	10	11.5	13.5	15.5	17.5	19.5
6 x 12	7 3/8 x 13 3/8	Cfm	100	130	165	200	230	265	295	330
Ak .299		Throw	4	5	6.5	7.5	9	10	11.5	12.5
		Spread	6.5	8.5	11	13	15	17	19.5	21.5
6 x 14	7 3/8 x 15 3/8	Cfm	115	155	195	235	275	310	350	390
Ak .347		Throw	4.5	5.5	7	8.5	10	11	12.5	14
		Spread	7.5	9.5	12	14	17	19	21.5	23.5

Terminal Velocity of 50 fpm Always specify width by height

T32 TOE SPACE REGISTERS

Steel Construction
Rolled Face
Mounting Holes
Golden Brown or White Finish
Reinforced for Strength

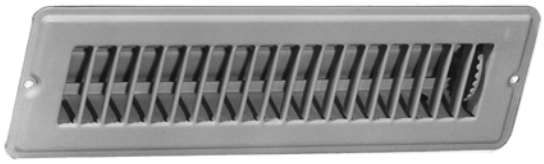

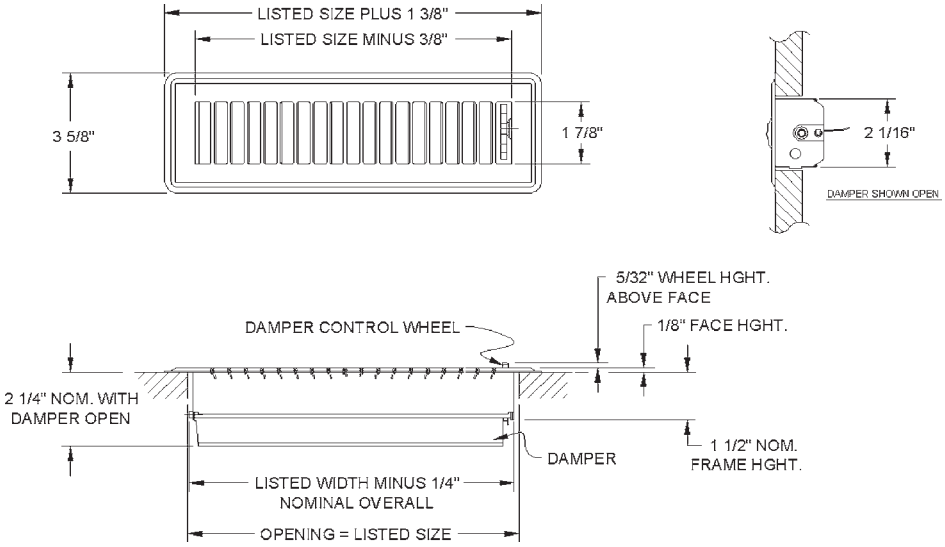

T32 SERIES TOE SPACE REGISTERS

UNIT SIZE	OVERALL SIZE	FACE VELOCITY	300	400	500	600	700	800	900	1000
		PRESSURE LOSS	.006	.010	.016	.022	.031	.040	.050	.062
2 1/4 x 10 Ak .097	3 5/8 x 11 3/8	Cfm	29	38	48	58	68	77	87	97
		Throw	2	3	3.5	4	4.5	5	6	6.5
		Spread	3.5	4.5	5	6.5	7.5	8.5	10	11
2 1/4 x 12 Ak .118	3 5/8 x 13 3/8	Cfm	35	47	59	70	82	94	106	118
		Throw	2	3	3.5	4	4.5	5.5	6	7
		Spread	3.5	5	5	7	8	10	11	12
2 1/4 x 14 Ak .132	3 5/8 x 15 3/8	Cfm	39	52	65	79	92	105	118	131
		Throw	2.5	3	3.5	4.5	5	6	6.5	7.5
		Spread	3.5	4.5	6	7	8.5	10	11.5	12.5

Terminal Velocity of 50 fpm Always specify width by height

51 TOE SPACE REGISTERS

Steel Construction
1/3” Spaced Fins
Positive Volume Control Damper
Lanced Face
Golden Brown or White Finish

Engineer’s specs on page 3

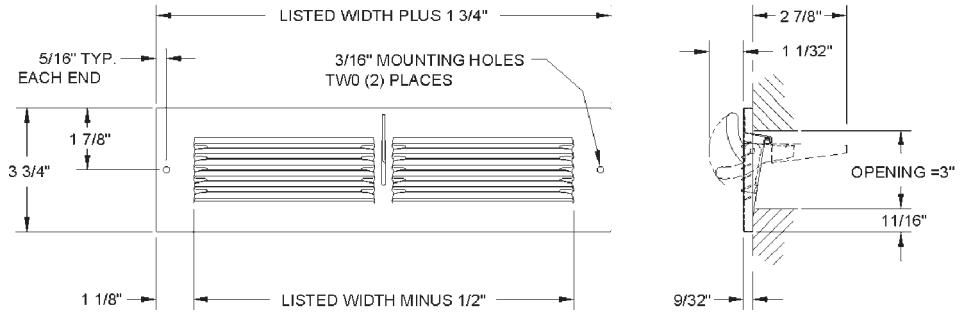

51 SERIES TOE SPACE REGISTERS

UNIT SIZE	OVERALL SIZE	FACE VELOCITY	300	400	500	600	700	800	900	1000
		PRESSURE LOSS	.006	.010	.016	.022	.031	.040	.050	.062
10x3	11 3/4 x 3 3/4	Cfm	30	40	51	61	71	81	91	101
Ak .17		Throw	5	6.5	8	9.5	11	12.5	17	17
12x3	13 3/4 x 3 3/4	Cfm	37	49	62	74	86	98	111	123
Ak .12		Throw	4.5	5.5	7	8.5	10	11.5	13	16
14x3	15 3/4 x 3 3/4	Cfm	44	58	73	88	102	117	131	146
Ak .15		Throw	4	5.5	7	8.5	9.5	11	12	15

Terminal Velocity of 75 fpm Always specify width by height

TG32 TOE SPACE GRILLES

Steel Construction
Rolled Face
Mounting Holes
Golden Brown or White Finish

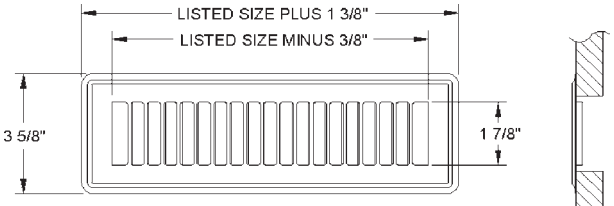

Engineer's specs on page 4

TG32 SERIES TOE SPACE GRILLES

UNIT SIZE	OVERALL SIZE	FACE VELOCITY	300	400	500	600	700	800	900	1000
		PRESSURE LOSS	.006	.010	.016	.022	.031	.040	.050	.062
2 1/4 x 10	3 5/8 x 11 3/8	Cfm	29	38	48	58	68	77	87	97
Ak .097		Throw	2	3	3.5	4	4.5	5	6	6.5
		Spread	3.5	4.5	5	6.5	7.5	8.5	10	11
2 1/4 x 12	3 5/8 x 13 3/8	Cfm	35	47	59	70	82	94	106	118
Ak.118		Throw	2	3	3.5	4	4.5	5.5	6	7
		Spread	3.5	5	5	7	8	10	11	12
2 1/4 x 14	3 5/8 x 15 3/8	Cfm	39	52	65	79	92	105	118	131
Ak .132		Throw	2.5	3	3.5	4.5	5	6	6.5	7.5
		Spread	3.5	4.5	6	7	8.5	10	11.5	12.5
4 x 10	5 3/8 x 11 3/8	Cfm	52	69	86	104	121	138	156	173
Ak .174		Throw	2.5	3	4	4.5	5.5	6.5	7	8
		Spread	4	4.5	6.5	8.5	9.5	11	12.5	14
4 x 12	5 3/8 x 13 3/8	Cfm	62	83	104	124	145	166	187	208
Ak .208		Throw	2.5	3.5	4	5.5	6	7	8	8.5
		Spread	4	6	7.5	9	10.5	12	13.5	15.5
4 x 14	5 3/8 x 15 3/8	Cfm	72	97	121	145	170	194	218	243
Ak .243		Throw	3	4	5	6	7	7.5	8.5	9.5
		Spread	4.5	6.5	8.5	9.5	11.5	13	14	16.5

Terminal Velocity of 50 fpm Always specify width by height

F20 BAR-FACED REGISTERS

Steel Construction
Bar-Faced
Extremely Rigid
Firm, Smooth Surface
Free Area Averages Over 74%
Toe Operated, Valve Control
Golden Brown Finish

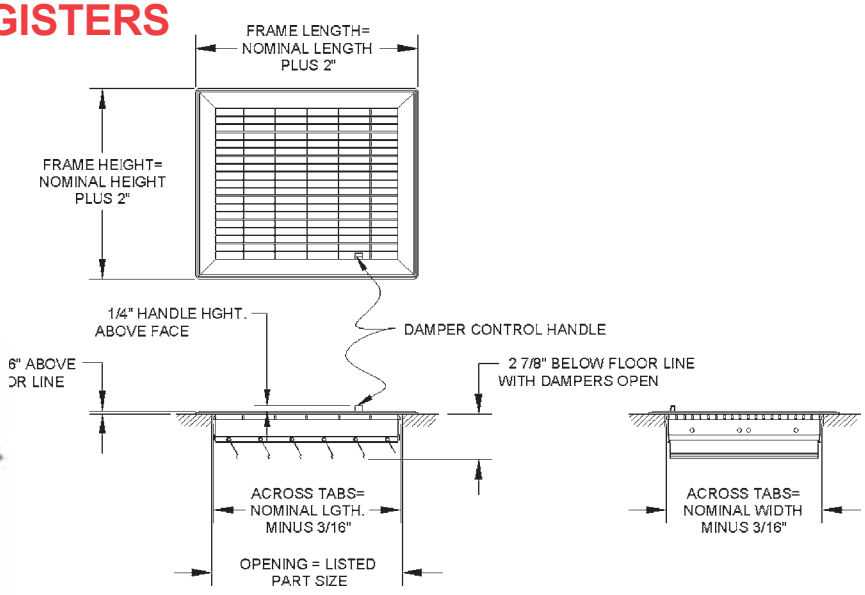

F20 SERIES BAR FACED REGISTERS

UNIT SIZE	OVERALL SIZE	FACE VELOCITY	300	400	500	600	700	800	900	1000
		PRESSURE LOSS	.006	.010	.016	.022	.031	.040	.050	.062
4x8	6 x 10	Cfm	48	64	80	96	112	128	144	160
Ak .160		Throw	5	7	9	11	12	14	16	17
4x10	6 x 12	Cfm	60	80	100	121	141	161	181	201
Ak .201		Throw	8	11	13	16	19	22	24	26
4x12	6 x 14	Cfm	73	97	122	146	170	194	219	243
Ak .243		Throw	9	12	15	18	21	25	28	31
6x6	8 x 8	Cfm	54	72	91	109	127	145	163	181
Ak .181		Throw	6	8	10	12	14	15	16	17
6x8	8 x 10	Cfm	75	100	125	150	175	200	225	250
Ak .250		Throw	9	12	15	18	21	25	28	31

Engineer's specs continued on page 5

F20 BAR FACED REGISTERS (CONT'D)

UNIT SIZE	OVERALL SIZE	FACE VELOCITY	300	400	500	600	700	800	900	1000
		PRESSURE LOSS	.006	.010	.016	.022	.031	.040	.050	.062
6x10	8 x 12	Cfm	91	125	157	188	219	250	282	313
Ak .313		Throw	10	14	17	21	24	27	31	34
6x12	8 x 14	Cfm	110	147	184	221	258	294	331	368
Ak .368		Throw	12	15	19	23	26	30	34	38
6x14	8 x 16	Cfm	129	172	216	259	302	345	388	431
Ak .431		Throw	13	16	20	24	28	32	36	41
6x16	8 x 18	Cfm	148	197	247	296	345	394	444	493
Ak .493		Throw	11	16	21	25	30	35	39	44
8x8	10 x 10	Cfm	96	128	160	192	224	256	288	320
Ak .320		Throw	10	14	17	21	24	27	31	34
8x10	10 x 12	Cfm	127	170	212	254	297	339	382	424
Ak .424		Throw	12	15	18	24	28	32	37	41
8x12	10 x 14	Cfm	148	197	247	296	345	394	444	493
Ak .493		Throw	12	17	21	26	32	37	43	48
8x14	10 x 16	Cfm	171	228	285	341	398	455	512	569
Ak .569		Throw	14	20	24	29	34	39	44	50
9x12	11 x 14	Cfm	176	235	294	352	411	470	528	587
Ak .587		Throw	14	20	24	29	34	39	44	50
10x10	12 x 12	Cfm	149	199	249	299	349	398	448	498
Ak .498		Throw	12	17	21	26	32	37	43	48
10x12	12 x 14	Cfm	183	244	306	367	428	489	550	611
Ak .611		Throw	14	18	24	30	35	41	46	51
10x14	12 x 16	Cfm	219	292	365	438	510	583	656	729
Ak .729		Throw	14	21	28	34	40	46	51	56
12x12	14 x 14	Cfm	221	294	368	442	515	589	662	736
Ak .736		Throw	14	21	28	34	40	46	51	56
12x14	14 x 16	Cfm	247	329	411	493	575	658	740	822
Ak .822		Throw	18	24	30	37	43	50	56	62

Terminal Velocity of 50 fpm Always specify width by height

F25 BAR-FACED FLOOR GRILLES

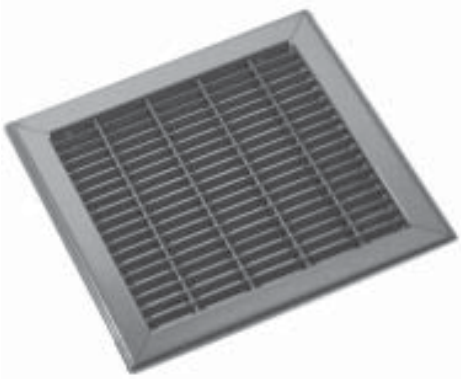

Steel Construction
Bar-Faced
Extremely Rigid
Firm, Smooth Surface
Golden Brown Finish, Standard
Also Available in White

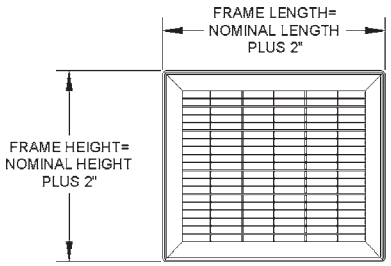

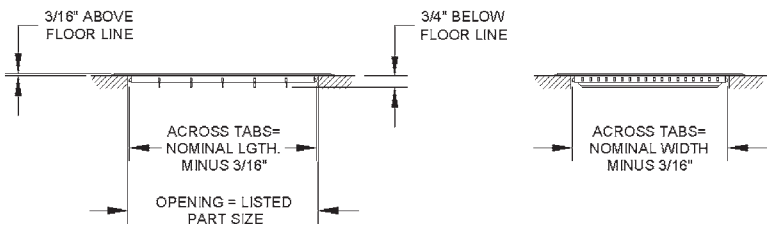

Engineer's specs on page 6

F25 SERIES BAR FACED FLOOR GRILLES

UNIT SIZE	OVERALL SIZE	FACE VELOCITY	300	400	500	600	700	800	900	1000
4x10	6 x 12	Cfm	61	81	101	121	141	162	182	202
Ak .202		Pt	.004	.011	.018	.025	.034	.044	.056	.066
4x12	6 x 14	Cfm	73	97	122	146	170	194	219	243
Ak .243		Pt	.005	.011	.017	.024	.033	.043	.054	.065
4x14	6 x 16	Cfm	85	114	142	152	199	227	256	284
Ak .284		Pt	.006	.011	.016	.023	.032	.042	.052	.064
4x24	6 x 26	Cfm	147	196	245	294	343	392	441	490
Ak .490		Pt	.004	.009	.014	.020	.028	.036	.046	.057
4x30	6 x 32	Cfm	184	246	307	368	430	491	553	614
Ak .614		Pt	.004	.009	.014	.019	.027	.035	.043	.054
6x10	8 x 12	Cfm	95	127	159	190	222	254	285	317
Ak .317		Pt	.005	.010	.016	.022	.031	.041	.051	.063
6x12	8 x 14	Cfm	115	153	191	229	267	306	344	382
Ak .382		Pt	.006	.010	.015	.021	.030	.039	.049	.060
6x14	8 x 16	Cfm	134	179	236	269	313	358	402	447
Ak .447		Pt	.006	.010	.015	.020	.029	.038	.047	.058
6x20	8 x 22	Cfm	212	282	353	424	494	565	635	706
Ak .706		Pt	.004	.009	.014	.019	.027	.035	.043	.054
6x24	8 x 26	Cfm	231	308	386	463	540	617	694	771
Ak .771		Pt	.005	.009	.013	.019	.026	.033	.042	.053
6x30	8 x 32	Cfm	290	386	483	579	676	772	869	965
Ak .965		Pt	.004	.008	.012	.018	.024	.032	.040	.049
8x10	10 x 12	Cfm	130	173	217	260	303	346	390	433
Ak .433		Pt	.006	.010	.015	.021	.029	.038	.047	.059
8x12	10 x 14	Cfm	156	208	261	313	365	417	469	521
Ak .521		Pt	.004	.009	.014	.020	.028	.036	.046	.057
8x14	10 x 16	Cfm	183	244	305	365	426	487	548	609
Ak .609		Pt	.004	.009	.014	.019	.027	.035	.044	.055
8x16	10 x 18	Cfm	209	279	349	419	489	558	628	698
Ak .698		Pt	.006	.010	.015	.020	.028	.037	.045	.057
8x20	10 x 22	Cfm	262	350	437	524	612	699	787	874
Ak .874		Pt	.004	.009	.014	.019	.026	.034	.042	.052
8x24	10 x 26	Cfm	315	420	526	631	736	841	946	1051
Ak 1.051		Pt	.004	.008	.012	.018	.024	.031	.039	.048
9x12	11 x 13	Cfm	177	236	296	355	414	473	532	591
Ak .591		Pt	.004	.009	.014	.019	.027	.035	.045	.056
10x12	12 x 14	Cfm	198	264	330	396	462	528	594	660
Ak .660		Pt	.004	.009	.014	.019	.027	.035	.043	.054
10x14	12 x 16	Cfm	232	309	386	463	540	618	695	772
Ak .772		Pt	.004	.009	.013	.019	.026	.033	.042	.053
10x20	12 x 22	Cfm	332	443	554	664	775	886	996	1107
Ak 1.107		Pt	.004	.008	.012	.018	.024	.031	.039	.048
10x24	12 x 26	Cfm	399	532	666	799	932	1065	1198	1331
Ak 1.331		Pt	.004	.008	.012	.017	.023	.030	.037	.046
10x30	12 x 32	Cfm	500	669	834	1000	1167	1334	1500	1667
Ak 1.667		Pt	.003	.007	.011	.016	.022	.029	.036	.044
12x12	14 x 14	Cfm	244	325	407	488	569	650	732	813
Ak .813		Pt	.005	.009	.013	.019	.026	.033	.042	.053
12x14	14 x 16	Cfm	285	380	475	569	664	759	854	949
Ak .949		Pt	.004	.008	.012	.018	.025	.032	.041	.051
12x20	14 x 22	Cfm	407	542	678	813	949	1084	1220	1355
Ak 1.355		Pt	.004	.008	.012	.017	.023	.030	.037	.046
12x24	14 x 26	Cfm	488	650	813	976	1138	1301	1463	1626
Ak 1.626		Pt	.003	.007	.011	.016	.022	.029	.036	.044
12x30	14 x 32	Cfm	528	704	880	1056	1232	1408	1584	1760
Ak 1.760		Pt	.003	.007	.011	.015	.021	.027	.034	.042
16x20	18 x 22	Cfm	558	744	931	1117	1303	1489	1675	1861
Ak 1.861		Pt	.003	.007	.011	.015	.021	.028	.035	.043
20x20	2 x 22	Cfm	689	919	1149	1378	1608	1838	2067	2297
Ak 2.297		Pt	.003	.006	.009	.014	.019	.025	.031	.038
20x30	22 x 32	Cfm	1034	1378	1723	2067	2412	2756	3101	3445
Ak 3.445		Pt	.003	.006	.010	.015	.020	.025	.032	.040

Terminal velocity of 50 fpm Always specify width by height

Baseboard Diffusers & Grilles

150 SUNBURST BASEBOARD DIFFUSERS

180 SUNBURST BASEBOARD DIFFUSERS

240 SUNBURST BASEBOARD DIFFUSERS

1505 SUNBURST BASEBOARD RETURN AIR (WITHOUT DAMPER)

1805 SUNBURST BASEBOARD RETURN AIR (WITHOUT DAMPER)

2405 SUNBURST BASEBOARD RETURN AIR (WITHOUT DAMPER)

Steel Construction
Sunburst Design
1/3" Spaced Fins
Lanced Face
Golden Brown or White Finish

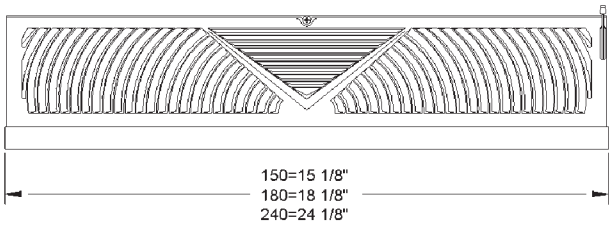

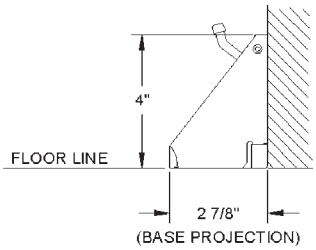

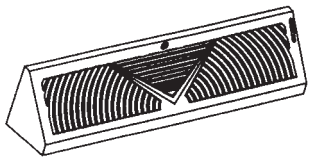

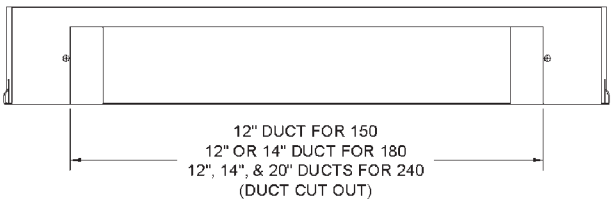

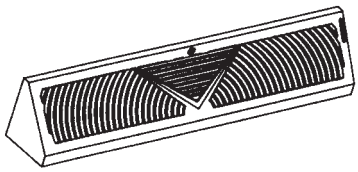

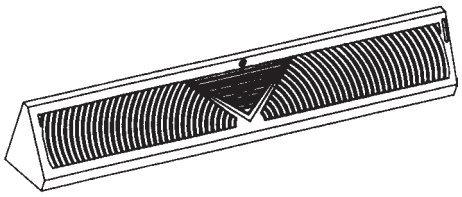

150/180/240 BASEBOARD DIFFUSERS & GRILLES

UNIT SIZE	OVERALL SIZE	FACE VELOCITY	300	400	500	600	700	800	1000
		PRESSURE LOSS	.006	.010	.016	.022	.031	.040	.062
15" Ak .222	15 1/8"	Cfm	67	89	111	133	156	178	222
		Throw	3.8	5.6	6.9	7.8	8.4	9.2	10.2
		Spread	3.9	5.2	6.4	7.3	8.5	9.3	11.3
18" Ak .264	18 1/8"	Cfm	79	106	132	158	185	211	264
		Throw	4.7	6.8	8.4	9.4	9.9	11.1	12.4
		Spread	4.7	6.3	7.8	8.9	9.9	11.1	13.7
24" Ak .354	24 1/8"	Cfm	106	142	177	213	248	283	354
		Throw	6.3	9.1	11.1	12.5	13.2	14.7	16.4
		Spread	6.2	8.3	10.3	11.8	13.1	14.6	18.2

Terminal Velocity of 50 fpm Always specify width by height

*151 & 181 Series available without face mounting hole.

E-MAIL: crc@TheRegisterPeople.com WEBSITE: www.TheRegisterPeople.com

B22 BASEBOARD DIFFUSERS

Steel Construction
7/8" Extension
1/2" Spaced Fins

Lanced Face
Multi-Shutter Damper
White Finish

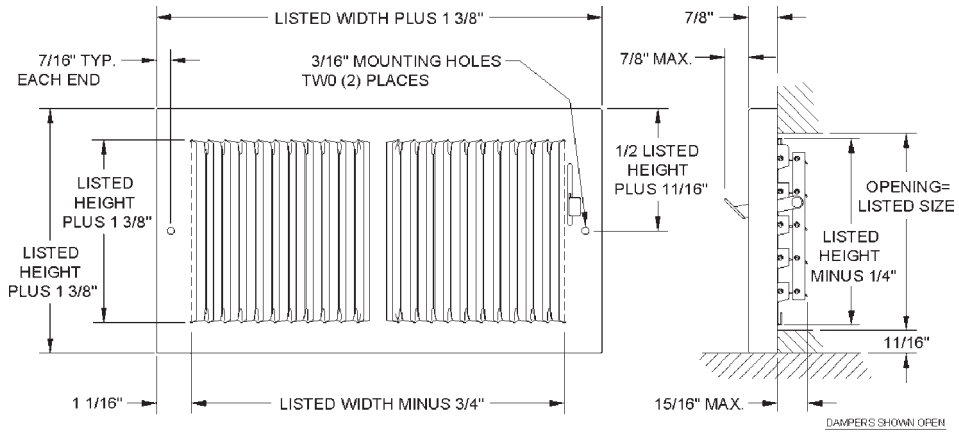

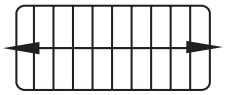

B22 SERIES BASEBOARD DIFFUSERS

UNIT SIZE	OVERALL SIZE	FACE VELOCITY	300	400	500	600	700	800	900	1000
		PRESSURE LOSS	.006	.010	.016	.022	.031	.040	.050	.062
8x6	9 3/8 x7 3/8	Cfm	72	96	120	144	168	192	216	240
Ak .24		Throw	5	7	8	10	12	14	15	17
10x6	11 3/8 x 7 3/8	Cfm	84	96	140	168	196	224	216	280
Ak .28		Throw	6	8	9	11	13	15	17	19
12x6	13 3/8 x 7 3/8	Cfm	105	140	175	210	245	280	315	350
Ak .35		Throw	7	8	10	12	15	17	19	21
12x8	13 3/8 x 9 3/8	Cfm	144	192	240	288	336	384	432	480
Ak .48		Throw	7	9	11	13	18	17	19	22
14x6	15 3/8 x 7 3/8	Cfm	123	164	205	246	287	328	369	410
Ak .41		Throw	7	8	11	13	16	18	20	23

Terminal Velocity of 75 fpm Always specify width by height

B32 BASEBOARD DIFFUSERS

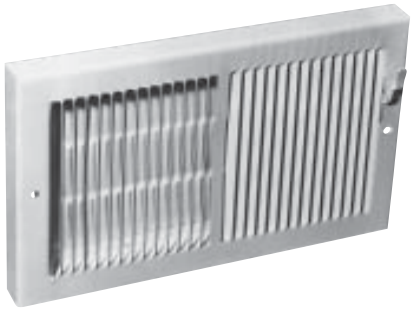

Steel Construction
7/8" Extension
1/3" Spaced Fins

Lanced Face
Multi-Shutter Damper
White Finish

Engineer's specs on page 9

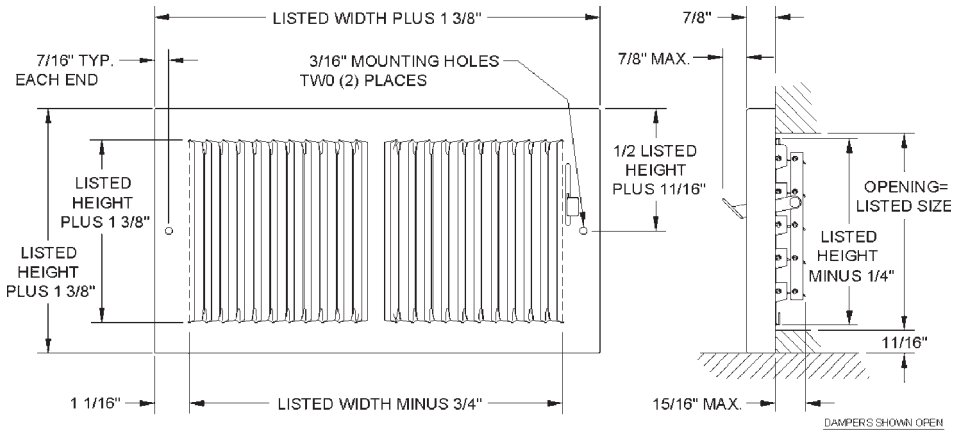

B32 SERIES BASEBOARD DIFFUSERS

UNIT SIZE	OVERALL SIZE	FACE VELOCITY	300	400	500	600	700	800	900	1000
		PRESSURE LOSS	.006	.010	.016	.022	.031	.040	.050	.062
8x6	9 3/8 x 7 3/8	Cfm	69	92	115	138	161	184	207	230
Ak .23		Throw	5	7	8	10	12	14	15	17
10x6	11 3/8 x 7 3/8	Cfm	87	116	145	174	203	232	261	290
Ak .29		Throw	6	8	9	11	13	15	17	19
12x6	13 3/8 x 7 3/8	Cfm	105	140	175	210	245	280	315	350
Ak .35		Throw	7	8	10	12	15	17	19	21
12x8	13 3/8 x 9 3/8	Cfm	144	192	240	288	336	384	432	480
Ak .48		Throw	7	9	11	13	18	17	19	22
14x6	15 3/8 x 7 3/8	Cfm	123	164	205	246	287	328	369	410
Ak .41		Throw	7	8	11	13	16	18	20	23

Terminal Velocity of 75 fpm Always specify width by height

BG21 BASEBOARD GRILLES

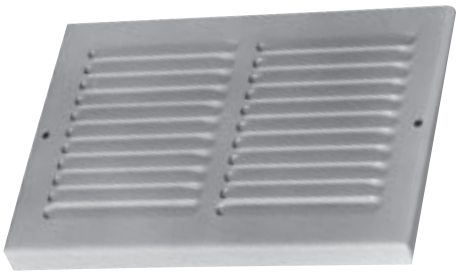

Steel Construction
7/8" Extension
1/2" Spaced Fins

Lanced Face
White Finish

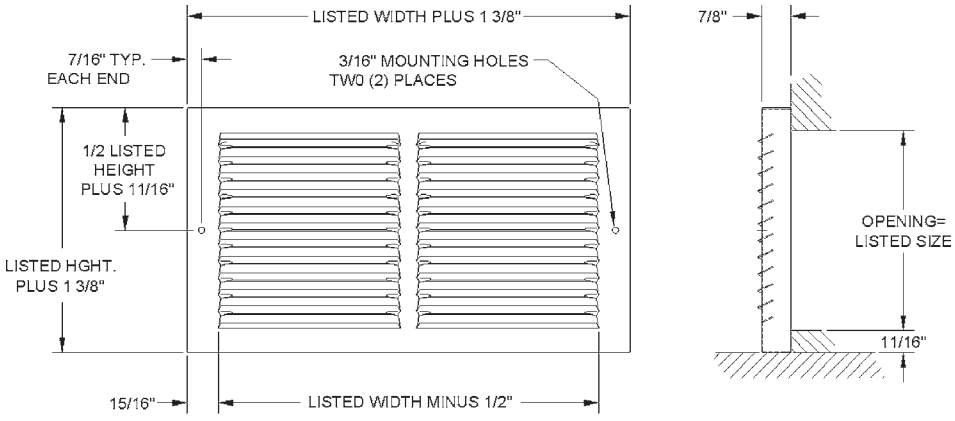

Engineer's specs on page 10

BG21 SERIES BASEBOARD GRILLES

UNIT SIZE	OVERALL SIZE	FACE VELOCITY	300	400	500	600	700	800	900	1000
8x6	9 3/8 x 7 3/8	Cfm	72	96	120	144	168	192	216	240
Ak .24		Pt	.021	.038	.058	.082	.112	.121	.130	.140
10x6	11 3/8 x 7 3/8	Cfm	87	116	145	174	203	232	261	290
Ak .29		Pt	.021	.037	.057	.081	.110	.119	.128	.139
10x8	11 3/8 x 9 3/8	Cfm	120	160	200	240	280	320	360	400
Ak .40		Pt	.021	.034	.054	.078	.105	.014	.123	.133
12x4	13 3/8 x 5 3/8	Cfm	66	88	110	132	154	176	198	220
Ak .22		Pt	.021	.038	.058	.082	.112	.121	.130	.140
12x6	13 3/8 x 7 3/8	Cfm	105	140	175	210	245	280	315	350
Ak .35		Pt	.021	.037	.057	.081	.110	.119	.128	.139
12x8	13 3/8 x 9 3/8	Cfm	144	192	240	288	336	384	432	480
Ak .48		Pt	.021	.037	.057	.081	.110	.119	.128	.139
14x4	15 3/8 x 5 3/8	Cfm	78	104	130	156	182	208	234	260
Ak .26		Pt	.021	.037	.056	.081	.109	.118	.127	.137
14x6	15 3/8 x 7 3/8	Cfm	126	168	210	252	294	336	378	420
Ak .42		Pt	.020	.034	.054	.078	.105	.014	.123	.133
14x8	15 3/8 x 9 3/8	Cfm	171	228	285	342	399	456	513	570
Ak .57		Pt	.018	.032	.050	.073	.099	.108	.117	.127
14x10	15 3/8 x 11 3/8	Cfm	216	288	360	432	504	576	648	720
Ak .72		Pt	.016	.029	.046	.066	.089	.098	.107	.117
14x12	15 3/8 x 13 3/8	Cfm	264	352	440	528	616	704	792	880
Ak .88		Pt	.015	.027	.043	.062	.084	.093	.102	.112
16x6	17 3/8 x 7 3/8	Cfm	144	192	240	288	336	384	432	480
Ak .48		Pt	.021	.037	.057	.081	.110	.119	.128	.139
16x8	17 3/8 x 9 3/8	Cfm	198	264	330	396	462	528	594	660
Ak .66		Pt	.017	.031	.049	.072	.092	.101	.110	.120
16x10	17 3/8 x 11 3/8	Cfm	249	320	415	498	581	664	747	830
Ak .83		Pt	.016	.028	.045	.065	.087	.096	.105	.115
16x12	17 3/8 x 13 3/8	Cfm	303	404	505	606	707	808	909	1010
Ak 1.01		Pt	.014	.025	.038	.055	.076	.085	.094	.103
18x6	19 3/8 x 7 3/8	Cfm	159	212	265	318	371	424	477	530
Ak .53		Pt	.018	.032	.050	.073	.099	.108	.117	.127
18x8	19 3/8 x 9 3/8	Cfm	216	288	360	432	504	576	648	720
Ak .72		Pt	.016	.029	.046	.065	.089	.097	.106	.116
20x6	21 3/8 x 7 3/8	Cfm	174	232	290	348	406	464	522	580
Ak .58		Pt	.018	.032	.050	.073	.099	.108	.117	.127
20x8	21 3/8 x 9 3/8	Cfm	237	316	395	474	553	632	711	790
Ak .79		Pt	.016	.028	.045	.065	.087	.096	.105	.115
20x10	21 3/8 x 13 3/8	Cfm	300	400	500	600	700	800	900	1000
Ak 1.00		Pt	.014	.025	.038	.055	.076	.085	.094	.103
20x12	21 3/8 x 13 3/8	Cfm	363	484	605	726	847	968	1089	1210
Ak 1.21		Pt	.014	.024	.037	.054	.075	.084	.093	.103
24x6	25 3/8 x 7 3/8	Cfm	213	284	355	426	497	568	639	710
Ak .71		Pt	.017	.030	.047	.067	.090	.099	.108	.118
24x8	25 3/8 x 9 3/8	Cfm	291	388	485	582	679	776	873	970
Ak .97		Pt	.014	.025	.038	.055	.076	.085	.094	.103
24x10	25 3/8 x 11 3/8	Cfm	366	488	610	732	854	976	1098	1220
Ak 1.22		Pt	.013	.023	.036	.053	.072	.081	.090	.101
24x12	25 3/8 x 13 3/8	Cfm	444	592	740	888	1036	1184	1332	1480
Ak 1.48		Pt	.013	.023	.036	.052	.070	.079	.088	.098
30x4	31 3/8 x 5 3/8	Cfm	165	220	275	330	385	440	495	550
Ak .55		Pt	.017	.031	.049	.072	.092	.101	.110	.120
30x6	31 3/8 x 7 3/8	Cfm	261	348	435	522	609	696	783	870
Ak .87		Pt	.015	.027	.043	.062	.084	.093	.102	.010
30x8	31 3/8 9 3/8	Cfm	354	472	590	708	826	944	1062	1180
Ak 1.18		Pt	.014	.024	.037	.054	.075	.084	.093	.103
30x10	31 3/8 x 11 3/8	Cfm	447	596	745	894	1043	1192	1341	1490
Ak 1.49		Pt	.014	.023	.036	.052	.070	.079	.088	.098
30x12	31 3/8 x 13 3/8	Cfm	543	724	905	1086	1267	1448	1629	1810
Ak 1.81		Pt	.012	.021	.033	.048	.062	.071	.080	.090
36x6	37 3/8 x 7 3/8	Cfm	318	424	530	636	742	848	954	1060
Ak 1.06		Pt	.014	.025	.038	.055	.076	.085	.094	.104
36x8	37 3/8 x 9 3/8	Cfm	432	576	720	864	1008	1152	1296	1440
Ak 1.44		Pt	.013	.023	.036	.052	.070	.079	.088	.097
36x10	37 3/8 x 11 3/8	Cfm	549	732	915	1098	1281	1464	1647	1830
Ak 1.83		Pt	.012	.021	.033	.048	.062	.071	.080	.090
36x12	37 3/8 x 13 3/8	Cfm	666	888	1110	1332	1554	1776	1998	2220
Ak 2.22		Pt	.011	.020	.032	.047	.061	.070	.079	.089

Always specify width by height

BG31 BASEBOARD GRILLES

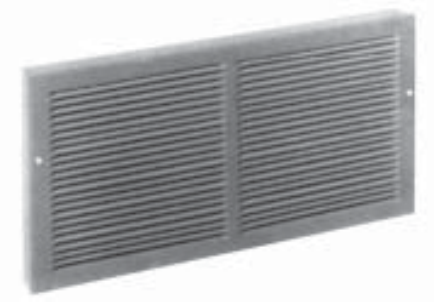

Steel Construction
7/8" Extension
1/3" Spaced Fins
Lanced Face
White Finish

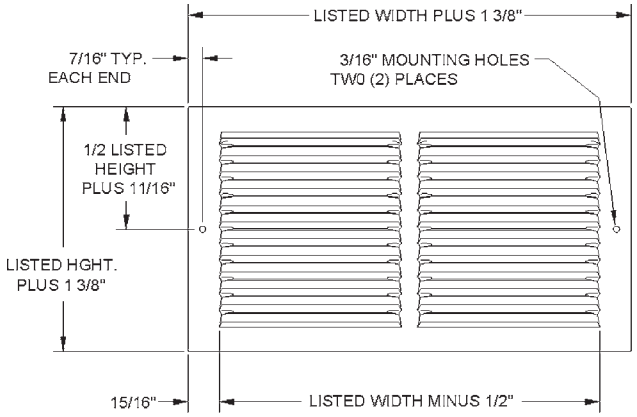

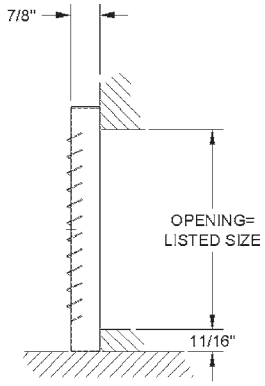

BG31 SERIES BASEBOARD GRILLES

UNIT SIZE	OVERALL SIZE	FACE VELOCITY	300	400	500	600	700	800	900	1000
8x6	9 3/8 x 7 3/8	Cfm	72	96	120	144	168	192	216	240
Ak .24		Pt	.014	.024	.038	.052	.073	.082	.091	.101
10x6	11 3/8 x 7 3/8	Cfm	87	116	145	174	203	232	261	290
Ak .29		Pt	.013	.023	.037	.052	.072	.081	.090	.099
10x8	11 3/8 x 9 3/8	Cfm	117	156	195	234	273	312	351	390
Ak .39		Pt	.012	.022	.035	.050	.068	.077	.086	.095
12x4	13 3/8 x 5 3/8	Cfm	69	92	115	138	161	184	207	230
Ak .23		Pt	.014	.024	.038	.052	.073	.082	.091	.101
12x6	13 3/8 x 7 3/8	Cfm	105	140	175	210	245	280	315	350
Ak .35		Pt	.013	.022	.035	.051	.070	.079	.088	.097
12x8	13 3/8 x 9 3/8	Cfm	141	188	235	282	329	376	423	470
Ak .47		Pt	.012	.022	.034	.049	.066	.075	.084	.094
14x4	15 3/8 x 5 3/8	Cfm	78	104	130	156	182	208	234	260
Ak .26		Pt	.014	.024	.038	.052	.073	.082	.091	.101
14x6	15 3/8 x 7 3/8	Cfm	126	168	210	252	294	336	378	420
Ak .42		Pt	.012	.022	.035	.050	.068	.077	.086	.095
14x8	15 3/8 x 9 3/8	Cfm	168	224	280	336	392	448	504	560
Ak .56		Pt	.012	.021	.033	.047	.065	.074	.083	.093
14x10	15 3/8 x 11 3/8	Cfm	213	284	355	426	497	568	639	710
Ak .71		Pt	.011	.020	.032	.045	.062	.071	.080	.090
14x12	15 3/8 x 13 3/8	Cfm	255	340	425	510	595	680	765	850
Ak .85		Pt	.011	.020	.031	.045	.060	.069	.078	.088
16x6	17 3/8 x 7 3/8	Cfm	144	192	240	288	336	384	432	480
Ak .48		Pt	.012	.022	.034	.049	.066	.075	.084	.094
16x8	17 3/8 x 9 3/8	Cfm	195	260	325	390	455	520	585	650
Ak .65		Pt	.012	.021	.033	.046	.063	.072	.081	.091
16x10	17 3/8 x 11 3/8	Cfm	246	328	410	492	574	656	738	820
Ak .82		Pt	.011	.020	.031	.044	.059	.068	.077	.087
16x12	17 3/8 x 13 3/8	Cfm	297	396	495	594	693	792	891	990
Ak .99		Pt	.011	.020	.031	.044	.059	.068	.077	.087

Engineer's specs continued on page 12

BG31 SERIES BASEBOARD GRILLES (CONT'D)

UNIT SIZE	OVERALL SIZE	FACE VELOCITY	300	400	500	600	700	800	900	1000
18x6	19 3/8 x 7 3/8	Cfm	159	212	265	318	371	424	477	530
Ak.53		Pt	.011	.020	.033	.047	.065	.074	.083	.093
18x8	19 3/8 x 9 3/8	Cfm	213	284	355	426	497	568	639	710
Ak .71		Pt	.011	.020	.032	.045	.062	.071	.080	.090
20x6	21 3/8 x 7 3/8	Cfm	171	228	285	342	399	456	513	570
Ak .57		Pt	.012	.021	.033	.047	.064	.073	.081	.091
20x8	21 3/8 x 9 3/8	Cfm	237	316	395	474	553	632	711	790
Ak .79		Pt	.011	.020	.031	.044	.059	.068	.077	.086
20x10	21 3/8 x 11 3/8	Cfm	294	392	490	588	686	784	882	980
Ak .98		Pt	.011	.019	.030	.043	.059	.068	.077	.087
20x12	21 3/8 x 13 3/8	Cfm	354	472	590	708	826	944	1062	1180
Ak 1.18		Pt	.011	.019	.030	.042	.057	.066	.075	.084
24x6	25 3/8 x 7 3/8	Cfm	210	280	350	420	490	560	630	700
Ak .70		Pt	.011	.020	.032	.045	.062	.071	.080	.090
24x8	25 3/8 x 9 3/8	Cfm	285	380	475	570	665	760	855	950
Ak .95		Pt	.011	.020	.031	.044	.059	.068	.077	.087
24x10	25 3/8 x 11 3/8	Cfm	357	476	595	714	833	952	1071	1190
Ak 1.19		Pt	.011	.019	.030	.042	.057	.066	.075	.084
24x12	25 3/8 x 13 3/8	Cfm	432	576	720	864	1008	1152	1296	1440
Ak 1.44		Pt	.010	.018	.029	.041	.056	.065	.074	.084
30x4	31 3/8 x 5 3/8	Cfm	171	228	285	342	399	456	513	570
Ak .57		Pt	.012	.021	.033	.047	.064	.073	.081	.091
30x6	31 3/8 x 7 3/8	Cfm	258	344	430	516	602	688	774	860
Ak .86		Pt	.011	.020	.031	.044	.060	.069	.078	.088
30x8	31 3/8 x 9 3/8	Cfm	348	464	580	696	812	928	1044	1159.72
Ak 1.16		Pt	.011	.019	.030	.042	.057	.066	.075	.084
30x10	31 3/8 x 11 3/8	Cfm	441	588	735	882	1029	1176	1323	1470
Ak 1.47		Pt	.010	.018	.029	.041	.055	.064	.073	.083
30x12	31 3/8 x 13 3/8	Cfm	531	708	885	1062	1239	1416	1593	1770
Ak 1.77		Pt	.010	.018	.028	.040	.054	.063	.072	.082
36x6	37 3/8 x 7 3/8	Cfm	315	420	525	630	735	840	945	1050
Ak 1.05		Pt	.011	.019	.030	.043	.059	.068	.077	.087
36x8	37 3/8 x 9 3/8	Cfm	426	568	710	852	994	1136	1278	1420
Ak 1.42		Pt	.010	.018	.029	.041	.056	.065	.074	.084
36x10	37 3/8 x 11 3/8	Cfm	537	716	895	1074	1253	1432	1611	1790
Ak 1.79		Pt	.010	.018	.028	.040	.054	.063	.072	.082
36x12	37 3/8 x 13 3/8	Cfm	651	868	1085	1302	1519	1736	1953	2170
Ak 2.17		Pt	.010	.018	.027	.039	.053	.062	.071	.081

Always specify width by height

BEG21 BASEBOARD GRILLES

Steel Construction
7/8" Top, 3 3/4" Extension Bottom
1/2" Spaced Fins
Lanced Face
White Finish

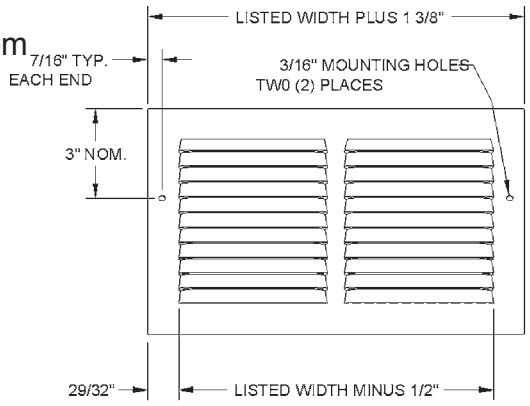

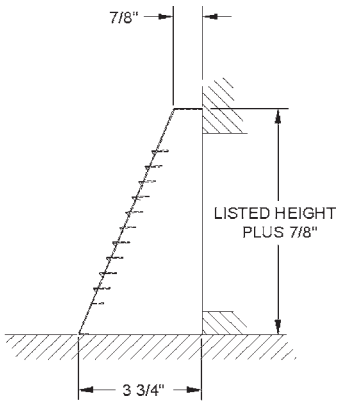

Engineer's specs on page 13

BEG21 SERIES BASEBOARD GRILLES

UNIT SIZE	OVERALL SIZE	FACE VELOCITY	300	400	500	600	700	800	900	1000
8x6	9 3/8 x 6 7/8	Cfm	72	96	120	144	168	192	216	240
Ak .24		Pt	.014	.024	.038	.052	.073	.082	.091	.101
10x6	11 3/8 x 6 7/8	Cfm	87	116	145	174	203	232	261	290
Ak .29		Pt	.013	.023	.037	.052	.072	.081	.090	.099
10x8	11 3/8 x 8 7/8	Cfm	117	156	195	234	273	312	351	390
Ak .39		Pt	.012	.022	.035	.050	.068	.077	.086	.095
12x4	13 3/8 x 4 7/8	Cfm	69	92	115	138	161	184	207	230
Ak .23		Pt	.014	.024	.038	.052	.073	.082	.091	.101
12x6	13 3/8 x 6 7/8	Cfm	105	140	175	210	245	280	315	350
Ak .35		Pt	.013	.022	.035	.051	.070	.079	.088	.097
12x8	13 3/8 x 8 7/8	Cfm	141	188	235	282	329	376	423	470
Ak .47		Pt	.012	.022	.034	.049	.066	.075	.084	.094
14x4	15 3/8 x 4 7/8	Cfm	78	104	130	156	182	208	234	260
Ak .26		Pt	.014	.024	.038	.052	.073	.082	.091	.101
14x6	15 3/8 x 6 7/8	Cfm	126	168	210	252	294	336	378	420
Ak .42		Pt	.012	.022	.035	.050	.068	.077	.086	.095
14x8	15 3/8 x 8 7/8	Cfm	168	224	280	336	392	448	504	560
Ak .56		Pt	.012	.021	.033	.047	.065	.074	.083	.093
14x10	15 3/8 x 10 7/8	Cfm	213	284	355	426	497	568	639	710
Ak .71		Pt	.011	.020	.032	.045	.062	.071	.080	.090
14x12	15 3/8 x 12 7/8	Cfm	255	340	425	510	595	680	765	850
Ak .85		Pt	.011	.020	.031	.045	.060	.069	.078	.088
16x6	17 3/8 x 6 7/8	Cfm	144	192	240	288	336	384	432	480
Ak .48		Pt	.012	.022	.034	.049	.066	.075	.084	.094
16x8	17 3/8 x 8 7/8	Cfm	195	260	325	390	455	520	585	650
Ak .65		Pt	.012	.021	.033	.046	.063	.072	.081	.091
16x10	17 3/8 x 10 7/8	Cfm	246	328	410	492	574	656	738	820
Ak .82		Pt	.011	.020	.031	.044	.059	.068	.077	.087
16x12	17 3/8 x 12 7/8	Cfm	297	396	495	594	693	792	891	990
Ak .99		Pt	.011	.020	.031	.044	.059	.068	.077	.087
18x6	19 3/8 x 6 7/8	Cfm	159	212	265	318	371	424	477	530
Ak.53		Pt	.011	.020	.033	.047	.065	.074	.083	.093
18x8	19 3/8 x 8 7/8	Cfm	213	284	355	426	497	568	639	710
Ak .71		Pt	.011	.020	.032	.045	.062	.071	.080	.090
20x6	21 3/8 x 6 7/8	Cfm	171	228	285	342	399	456	513	570
Ak .57		Pt	.012	.021	.033	.047	.064	.073	.081	.091
20x8	21 3/8 x 8 7/8	Cfm	237	316	395	474	553	632	711	790
Ak .79		Pt	.011	.020	.031	.044	.059	.068	.077	.086
20x10	21 3/8 x 10 7/8	Cfm	294	392	490	588	686	784	882	980
Ak .98		Pt	.011	.019	.030	.043	.059	.068	.077	.087
20x12	21 3/8 x 12 7/8	Cfm	354	472	590	708	826	944	1062	1180
Ak 1.18		Pt	.011	.019	.030	.042	.057	.066	.075	.084
24x6	25 3/8 x 6 7/8	Cfm	210	280	350	420	490	560	630	700
Ak .70		Pt	.011	.020	.032	.045	.062	.071	.080	.090
24x8	25 3/8 x 8 7/8	Cfm	285	380	475	570	665	760	855	950
Ak .95		Pt	.011	.020	.031	.044	.059	.068	.077	.087
24x10	25 3/8 x 10 7/8	Cfm	357	476	595	714	833	952	1071	1190
Ak 1.19		Pt	.011	.019	.030	.042	.057	.066	.075	.084
24x12	25 3/8 x 12 7/8	Cfm	432	576	720	864	1008	1152	1296	1440
Ak 1.44		Pt	.010	.018	.029	.041	.056	.065	.074	.084
30x4	31 3/8 x 4 7/8	Cfm	171	228	285	342	399	456	513	570
Ak .57		Pt	.012	.021	.033	.047	.064	.073	.081	.091
30x6	31 3/8 x 6 7/8	Cfm	258	344	430	516	602	688	774	860
Ak .86		Pt	.011	.020	.031	.044	.060	.069	.078	.088
30x8	31 3/8 x 8 7/8	Cfm	348	464	580	696	812	928	1044	1160
Ak 1.16		Pt	.011	.019	.030	.042	.057	.066	.075	.084
30x10	31 3/8 x 10 7/8	Cfm	441	588	735	882	1029	1176	1323	1470
Ak 1.47		Pt	.010	.018	.029	.041	.055	.064	.073	.083
30x12	31 3/8 x 12 7/8	Cfm	531	708	885	1062	1239	1416	1593	1770
Ak 1.77		Pt	.010	.018	.028	.040	.054	.063	.072	.082
36x6	37 3/8 x 6 7/8	Cfm	315	420	525	630	735	840	945	1050
Ak 1.05		Pt	.011	.019	.030	.043	.059	.068	.077	.087
36x8	37 3/8 x 8 7/8	Cfm	426	568	710	852	994	1136	1278	1420
Ak 1.42		Pt	.010	.018	.029	.041	.056	.065	.074	.084
36x10	37 3/8 x 10 7/8	Cfm	537	716	895	1074	1253	1432	1611	1790
Ak 1.79		Pt	.010	.018	.028	.040	.054	.063	.072	.082
36x12	37 3/8 x 12 7/8	Cfm	651	868	1085	1302	1519	1736	1953	2170
Ak 2.17		Pt	.010	.018	.027	.039	.053	.062	.071	.081

Always specify width by height

BEG31 BASEBOARD GRILLES

Steel Construction
7/8” Top, 3 3/4” Extension Bottom
1/3” Spaced Fins
Lanced Face
White Finish

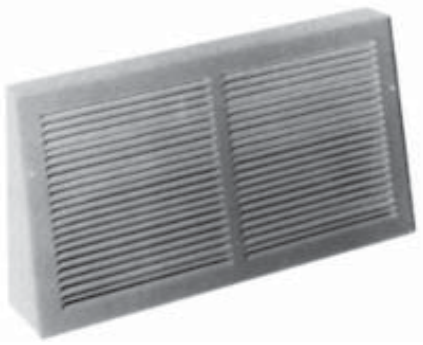

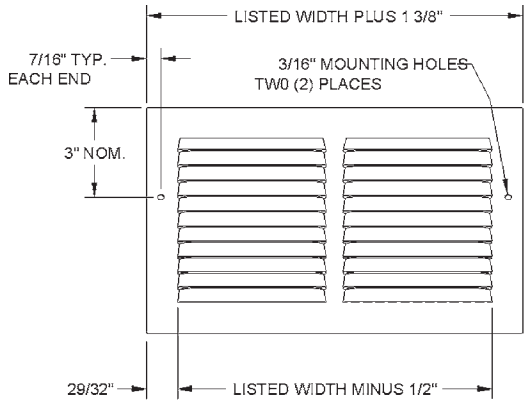

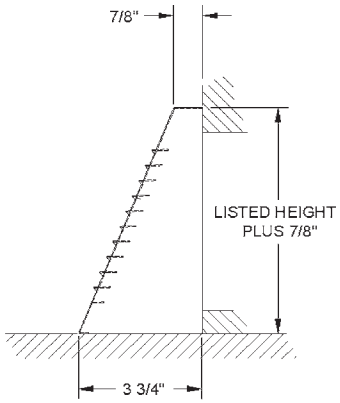

BEG31 SERIES BASEBOARD GRILLES

UNIT SIZE	OVERALL SIZE	FACE VELOCITY	300	400	500	600	700	800	900	1000
8x6	9 3/8 x 6 7/8	Cfm	72	96	120	144	168	192	216	240
Ak .24		Pt	.014	.024	.038	.052	.073	.082	.091	.101
10x6	11 3/8 x 6 7/8	Cfm	87	116	145	174	203	232	261	290
Ak .29		Pt	.013	.023	.037	.052	.072	.081	.090	.099
10x8	11 3/8 x 8 7/8	Cfm	117	156	195	234	273	312	351	390
Ak .39		Pt	.012	.022	.035	.050	.068	.077	.086	.095
12x4	13 3/8 x 4 7/8	Cfm	69	92	115	138	161	184	207	230
Ak .23		Pt	.014	.024	.038	.052	.073	.082	.091	.101
12x6	13 3/8 x 6 7/8	Cfm	105	140	175	210	245	280	315	350
Ak .35		Pt	.013	.022	.035	.051	.070	.079	.088	.097
12x8	13 3/8 x 8 7/8	Cfm	141	188	235	282	329	376	423	470
Ak .47		Pt	.012	.022	.034	.049	.066	.075	.084	.094
14x4	15 3/8 x 4 7/8	Cfm	78	104	130	156	182	208	234	260
Ak .26		Pt	.014	.024	.038	.052	.073	.082	.091	.101
14x6	15 3/8 x 6 7/8	Cfm	126	168	210	252	294	336	378	420
Ak .42		Pt	.012	.022	.035	.050	.068	.077	.086	.095
14x8	15 3/8 x 8 7/8	Cfm	168	224	280	336	392	448	504	560
Ak .56		Pt	.012	.021	.033	.047	.065	.074	.083	.093
14x10	15 3/8 x 10 7/8	Cfm	213	284	355	426	497	568	639	710
Ak .71		Pt	.011	.020	.032	.045	.062	.071	.080	.090
14x12	15 3/8 x 12 7/8	Cfm	255	340	425	510	595	680	765	850
Ak .85		Pt	.011	.020	.031	.045	.060	.069	.078	.088
16x6	16 3/8 x 6 7/8	Cfm	144	192	240	288	336	384	432	480
Ak .48		Pt	.012	.022	.034	.049	.066	.075	.084	.094
16x8	17 3/8 x 8 7/8	Cfm	195	260	325	390	455	520	585	650
Ak .65		Pt	.012	.021	.033	.046	.063	.072	.081	.091
16x10	17 3/8 x 10 7/8	Cfm	246	328	410	492	574	656	738	820
Ak .82		Pt	.011	.020	.031	.044	.059	.068	.077	.087
16x12	17 3/8 x 12 7/8	Cfm	297	396	495	594	693	792	891	990
Ak .99		Pt	.011	.020	.031	.044	.059	.068	.077	.087

Engineer’s specs continued on page 15

BEG31 SERIES BASEBOARD GRILLES (CONT'D)

UNIT SIZE	OVERALL SIZE	FACE VELOCITY	300	400	500	600	700	800	900	1000
18x6	19 3/8 x 6 7/8	Cfm	159	212	265	318	371	424	477	530
Ak.53		Pt	.011	.020	.033	.047	.065	.074	.083	.093
18x8	19 3/8 x 8 7/8	Cfm	213	284	355	426	497	568	639	710
Ak .71		Pt	.011	.020	.032	.045	.062	.071	.080	.090
20x6	21 3/8 x 6 7/8	Cfm	171	228	285	342	399	456	513	570
Ak .57		Pt	.012	.021	.033	.047	.064	.073	.081	.091
20x8	21 3/8 x 8 7/8	Cfm	237	316	395	474	553	632	711	790
Ak .79		Pt	.011	.020	.031	.044	.059	.068	.077	.086
20x10	21 3/8 x 10 7/8	Cfm	294	392	490	588	686	784	882	980
Ak .98		Pt	.011	.019	.030	.043	.059	.068	.077	.087
20x12	21 3/8 x 12 7/8	Cfm	354	472	590	708	826	944	1062	1180
Ak 1.18		Pt	.011	.019	.030	.042	.057	.066	.075	.084
24x6	24 3/8 x 6 7/8	Cfm	210	280	350	420	490	560	630	700
Ak .70		Pt	.011	.020	.032	.045	.062	.071	.080	.090
24x8	25 3/8 x 8 7/8	Cfm	285	380	475	570	665	760	855	950
Ak .95		Pt	.011	.020	.031	.044	.059	.068	.077	.087
24x10	25 3/8 x 10 7/8	Cfm	357	476	595	714	833	952	1071	1190
Ak 1.19		Pt	.011	.019	.030	.042	.057	.066	.075	.084
24x12	25 3/8 x 12 7/8	Cfm	432	576	720	864	1008	1152	1296	1440
Ak 1.44		Pt	.010	.018	.029	.041	.056	.065	.074	.084
30x4	31 3/8 x 4 7/8	Cfm	171	228	285	342	399	456	513	570
Ak .57		Pt	.012	.021	.033	.047	.064	.073	.081	.091
30x6	31 3/8 x 6 7/8	Cfm	258	344	430	516	602	688	774	860
Ak .86		Pt	.011	.020	.031	.044	.060	.069	.078	.088
30x8	31 3/8 x 8 7/8	Cfm	348	464	580	696	812	928	1044	1160
Ak 1.16		Pt	.011	.019	.030	.042	.057	.066	.075	.084
30x10	31 3/8 x 10 7/8	Cfm	441	588	735	882	1029	1176	1323	1470
Ak 1.47		Pt	.010	.018	.029	.041	.055	.064	.073	.083
30x12	31 3/8 x 12 7/8	Cfm	531	708	885	1062	1239	1416	1593	1770
Ak 1.77		Pt	.010	.018	.028	.040	.054	.063	.072	.082
36x6	37 3/8 x 6 7/8	Cfm	315	420	525	630	735	840	945	1050
Ak 1.05		Pt	.011	.019	.030	.043	.059	.068	.077	.087
36x8	37 3/8 x 8 7/8	Cfm	426	568	710	852	994	1136	1278	1420
Ak 1.42		Pt	.010	.018	.029	.041	.056	.065	.074	.084
36x10	37 3/8 x 10 7/8	Cfm	537	716	895	1074	1253	1432	1611	1790
Ak 1.79		Pt	.010	.018	.028	.040	.054	.063	.072	.082
36x12	37 3/8 x 12 7/8	Cfm	651	868	1085	1302	1519	1736	1953	2170
Ak 2.17		Pt	.010	.018	.027	.039	.053	.062	.071	.081

Always specify width by height

51 SIDEWALL DIFFUSERS

Steel Construction
1/3" Spaced Fins
Positive Volume Control Damper
Lanced Face
White Finish

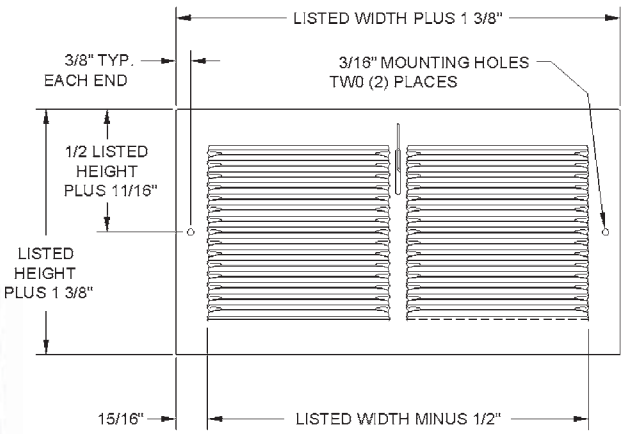

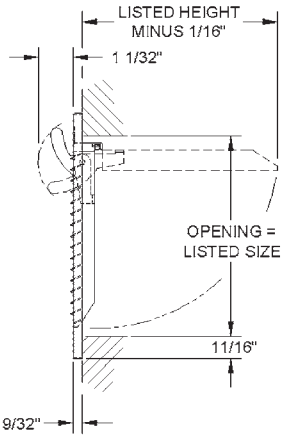

Engineer's specs on page 16

51 SERIES SIDEWALL DIFFUSER

UNIT SIZE	OVERALL SIZE	FACE VELOCITY	300	400	500	600	700	800	900	1000
		PRESSURE LOSS	.006	.010	.016	.022	.031	.040	.050	.062
10x4	11 3/4 x 5 3/4	Cfm	51	68	85	102	119	136	153	170
Ak .17		Throw	6.5	8.5	10.5	12.5	15	17.5	19	21
10x6	11 3/4 x 7 3/4	Cfm	81	108	135	162	189	216	243	270
Ak .27		Throw	9	11.5	14.5	17.5	20	23	25.5	29
12x4	13 3/4 x 5 3/4	Cfm	63	84	105	126	147	168	189	210
Ak .21		Throw	7.5	10	12.5	15	17.5	20.5	23	25
12x6	13 3/4 x 7 3/4	Cfm	99	132	165	198	231	264	297	330
Ak .33		Throw	10	13	17	20	23.5	26.5	30	33
14x6	15 3/4 x 7 3/4	Cfm	117	156	195	273	273	312	324	390
Ak .39		Throw	11	14.5	18	22	25.5	29	32.5	36

Terminal Velocity of 75 fpm Always specify width by height

54 BASEBOARD REGISTERS (WITH DAMPER)

Steel Construction
1/3" Spaced Fins
7/8" Extension
Positive Volume Control Damper
Lanced Face
White Finish

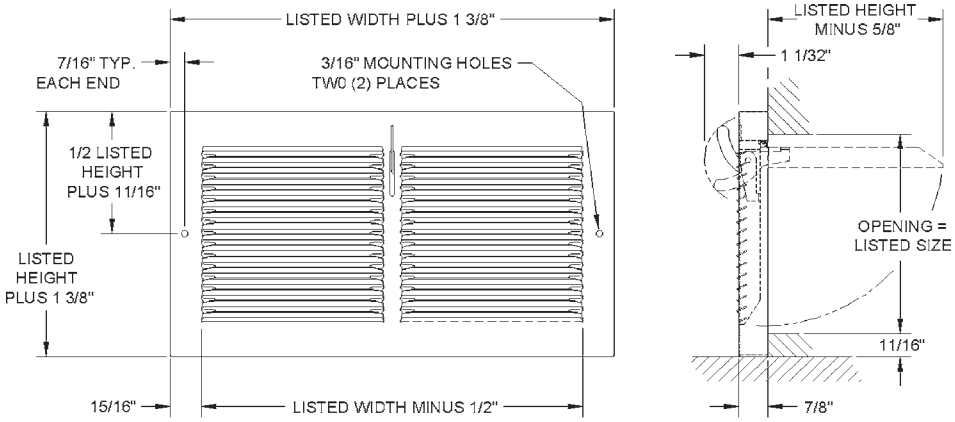

54 SERIES BASEBOARD DIFFUSERS

UNIT SIZE	OVERALL SIZE	FACE VELOCITY	300	400	500	600	700	800	900	1000
		PRESSURE LOSS	.006	.010	.016	.022	.031	.040	.050	.062
10x6	11 3/8 x 7 3/8	Cfm	87	116	145	174	203	232	261	290
Ak .29		Throw	9	11.5	14.5	17.5	20	23	25.5	29
12x6	13 3/8 x 7 3/8	Cfm	105	140	175	210	245	280	315	350
Ak .35		Throw	10	13	17	20	23.5	26.5	30	33
14x6	15 3/8 x 7 3/8	Cfm	126	168	210	252	294	336	378	420
Ak .42		Throw	11	14.5	18	22	25.5	29	32.5	36

Terminal Velocity of 75 fpm Always specify width by height

55 BASEBOARD DIFFUSERS
(WITH DAMPER)

Steel Construction
1/3” Spaced Fins
7/8” Top, 3 3/4” Extension Bottom
Positive Volume Control Damper
Lanced Face
White Finish

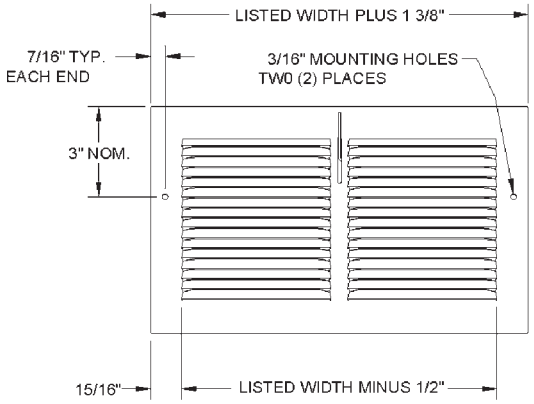

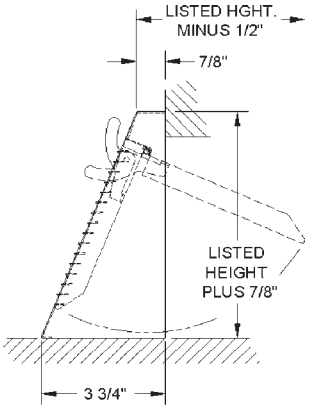

55 SERIES BASEBOARD DIFFUSERS

UNIT SIZE	OVERALL SIZE	FACE VELOCITY	300	400	500	600	700	800	900	1000
		PRESSURE LOSS	.006	.010	.016	.022	.031	.040	.050	.062
10x6	11 3/8 x 6 7/8	Cfm	87	116	145	174	203	232	261	290
Ak .29		Throw	9	11.5	14.5	17.5	20	23	25.5	29
12x6	13 3/8 x 6 7/8	Cfm	105	140	175	210	245	280	315	350
Ak .35		Throw	10	13	17	20	23.5	26.5	30	33
14x6	15 3/8 x 6 7/8	Cfm	126	168	210	252	294	336	378	420
Ak .42		Throw	11	14.5	18	22	25.5	29	32.5	36

Terminal Velocity of 75 fpm Always specify width by height

21 SIDEWALL/CEILING REGISTERS
1 WAY DEFLECTION

Steel Construction
1/2" Spaced Fins
Lanced Face
Multi-Shutter Damper
White Finish

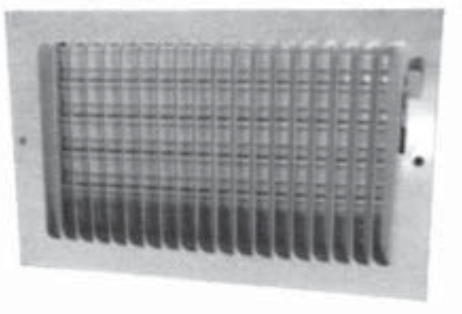

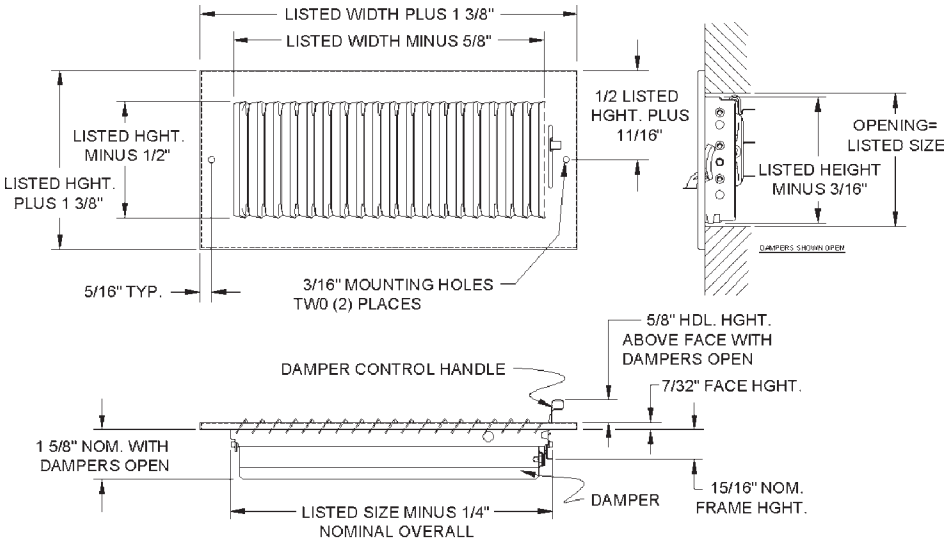

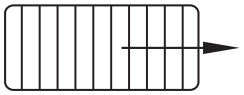

21 SERIES SIDEWALL/CEILING REGISTERS

UNIT SIZE	OVERALL SIZE	FACE VELOCITY	300	400	500	600	700	800	900	1000
		PRESSURE LOSS	.006	.010	.016	.022	.031	.040	.050	.062
8x4	9 3/8 x 5 3/8	Cfm	46	61	77	92	107	122	138	153
Ak .153		Throw	4	5	7	8	10	11	13	14
8x6	9 3/8 x 7 3/8	Cfm	73	97	122	146	170	194	219	243
Ak .243		Throw	5	6	8	9	11	12	14	15
10x6	11 3/8 x 7 3/8	Cfm	92	122	153	184	214	245	275	306
Ak .306		Throw	5	7	10	11	13	14	16	18
12x6	13 3/8 x 7 3/8	Cfm	110	147	184	221	258	294	331	368
Ak .368		Throw	6	8	12	12	14	16	18	20
14x6	15 3/8 x 7 3/8	Cfm	129	77	97	116	136	155	174	194
Ak .431		Throw	7	9	16	14	17	19	21	24
16x6	17 3/8 x 7 3/8	Cfm	150	200	250	300	350	400	450	500
Ak .500		Throw	8	10	18	15	18	20	23	25
18x6	19 3/8 x 7 3/8	Cfm	169	225	282	338	394	450	507	563
Ak .563		Throw	8	11	21	17	20	22	25	28
20x6	21 3/8 x 7 3/8	Cfm	188	250	313	375	438	500	563	625
Ak .625		Throw	5	12	24	18	21	24	27	30

Terminal Velocity of 75 fpm Always specify width by height

22 SIDEWALL/CEILING REGISTERS 2 WAY DEFLECTION

Steel Construction
1/2" Spaced Fins
Lanced Face
Multi-Shutter Damper
White Finish

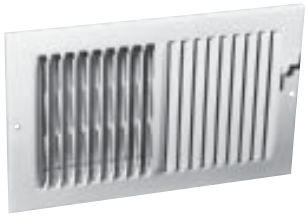

A22 SIDEWALL/CEILING REGISTERS 2 WAY DEFLECTION

Aluminum Construction
1/2" Spaced Fins
Lanced Face
Multi-Shutter Damper
White Finish

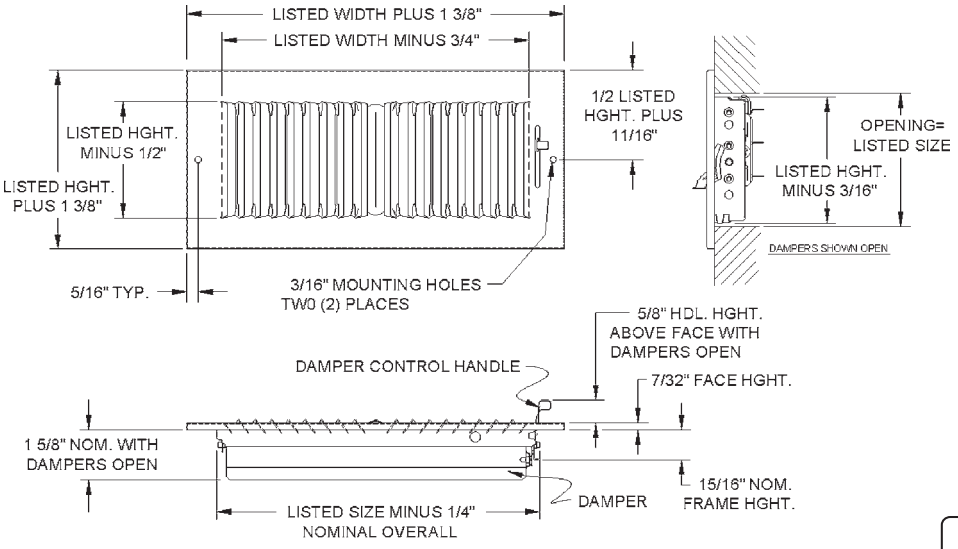

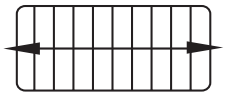

22/A22 SERIES SIDEWALL/CEILING REGISTERS

UNIT SIZE	OVERALL SIZE	FACE VELOCITY	300	400	500	600	700	800	900	1000
		PRESSURE LOSS	.006	.010	.016	.022	.031	.040	.050	.062
6x4	7 3/8 x 5 3/8	Cfm	31	42	52	63	73	83	94	104
Ak .104		Throw	3	4	5	7	8	9	10	11
6x6	7 3/8 x 7 3/8	Cfm	48	64	80	96	112	128	144	160
Ak .160		Throw	5	6	7	9	10	12	13	15
8x4	9 3/8 x 5 3/8	Cfm	44	58	73	88	102	117	131	146
Ak .146		Throw	4	5	7	8	9	11	12	13
8x6	9 3/8 x 7 3/8	Cfm	67	89	111	133	156	178	200	222
Ak .222		Throw	5	7	8	10	12	14	15	17
8x8	9 3/8 x 9 3/8	Cfm	92	122	153	184	214	244	275	306
Ak .306		Throw	6	7	9	11	13	15	17	19
10x4	11 3/8 x 5 3/8	Cfm	54	72	90	108	126	144	163	181
Ak .181		Throw	5	6	8	9	11	12	13	14
10x5	11 3/8 x 6 3/8	Cfm	71	94	118	142	165	189	213	236
Ak .236		Throw	5	7	8	10	12	13	15	17
10x6	11 3/8 x 7 3/8	Cfm	88	117	146	175	204	233	263	292
Ak .292		Throw	6	8	9	11	13	15	17	19
10x8	11 3/8 x 9 3/8	Cfm	119	158	198	238	277	317	356	396
Ak .396		Throw	7	8	10	12	14	16	17	21
10x10	11 3/8 x 11 3/8	Cfm	142	189	236	283	331	379	425	472
Ak .472		Throw	7	9	12	14	16	18	20	23
12x4	13 3/8 x 5 3/8	Cfm	67	89	111	133	156	178	200	222
Ak .222		Throw	5	7	8	10	12	14	15	17
12x5	13 3/8 x 6 3/8	Cfm	88	117	146	175	204	233	263	292
Ak .292		Throw	6	7	9	11	13	15	17	19

Engineering specs continued on page 20

22/A22 SERIES SIDEWALL/CEILING REGISTERS (CONT'D)

UNIT SIZE	OVERALL SIZE	FACE VELOCITY	300	400	500	600	700	800	900	1000
		PRESSURE LOSS	.006	.010	.016	.022	.031	.040	.050	.062
12x6	13 3/8 x 7 3/8	Cfm	106	142	177	213	248	283	319	354
Ak .354		Throw	7	8	10	12	15	17	19	21
12x8	13 3/8 x 9 3/8	Cfm	144	192	240	288	336	383	431	479
Ak .480		Throw	7	9	11	13	18	17	19	22
12x10	13 3/8 x 11 3/8	Cfm	173	231	288	346	404	461	519	576
Ak .576		Throw	8	11	13	16	19	22	25	28
12x12	13 3/8 x 13 3/8	Cfm	213	283	354	425	496	567	638	708
Ak .708		Throw	9	11	14	17	20	22	25	29
14x4	15 3/8 x 5 3/8	Cfm	79	106	132	158	185	211	238	264
Ak .264		Throw	5	7	9	11	13	15	17	18
14x6	15 3/8 x 7 3/8	Cfm	125	167	208	250	292	333	375	417
Ak .417		Throw	7	8	11	13	16	18	20	23
14x8	15 3/8 x 9 3/8	Cfm	171	228	285	342	399	456	513	569
Ak .469		Throw	8	9	12	14	17	19	21	24
14x10	15 3/8 x 11 3/8	Cfm	204	272	340	408	476	544	613	681
Ak .681		Throw	9	11	13	16	19	22	25	28
14x12	15 3/8 x 13 3/8	Cfm	250	333	417	500	583	667	750	833
Ak .833		Throw	9	12	14	18	22	24	27	31
14x14	15 3/8 x 15 3/8	Cfm	296	394	493	592	690	789	888	986
Ak .986		Throw	9	15	19	23	27	31	34	38
16x6	17 3/8 x 7 3/8	Cfm	144	192	240	288	335	383	431	479
Ak .479		Throw	7	10	12	15	17	20	22	25
16x8	17 3/8 x 9 3/8	Cfm	198	264	330	396	462	528	594	660
Ak .660		Throw	8	10	13	15	18	20	22	25
16x16	17 3/8 x 17 3/8	Cfm	394	525	656	788	919	1050	1181	1313
Ak 1.313		Throw	12	15	20	23	28	31	33	39
18x6	19 3/8 x 7 3/8	Cfm	165	219	274	329	384	439	494	549
Ak .549		Throw	8	11	13	16	19	22	24	27
18x8	19 3/8 x 9 3/8	Cfm	223	297	372	446	520	594	669	743
Ak .743		Throw	9	11	13	16	19	22	25	28
20x6	21 3/8 7 3/8	Cfm	183	244	306	367	428	489	550	611
Ak .611		Throw	8	11	14	16	20	23	25	28
20x8	21 3/8 x 9 3/8	Cfm	250	333	417	500	583	667	750	833
Ak .833		Throw	9	12	15	18	21	23	26	29
24x6	25 3/8 x 7 3/8	Cfm	221	294	368	442	515	589	663	736
Ak .736		Throw	9	12	15	18	21	23	26	29
24x8	25 3/8 x 9 3/8	Cfm	302	403	504	604	705	806	906	1007
Ak 1.007		Throw	10	13	17	19	23	25	28	31
30x6	31 3/8 x 7 3/8	Cfm	279	372	465	558	651	744	838	931
Ak .931		Throw	9	15	19	23	27	31	34	38
30x8	31 3/8 x 9 3/8	Cfm	381	508	635	763	890	1017	1144	1271
Ak 1.271		Throw	12	15	20	23	28	31	33	39

Terminal Velocity of 75 fpm Always specify width by height

23

SIDEWALL/CEILING REGISTERS 3-WAY DEFLECTION

Steel Construction
1/2" Spaced Fins
Lanced Face
Multi-Shutter Damper
White Finish

A23

SIDEWALL/CEILING REGISTERS 3-WAY DEFLECTION

Aluminum Construction
1/2" Spaced Fins
Lanced Face
Multi-Shutter Damper
White Finish

Engineer's specs on page 21

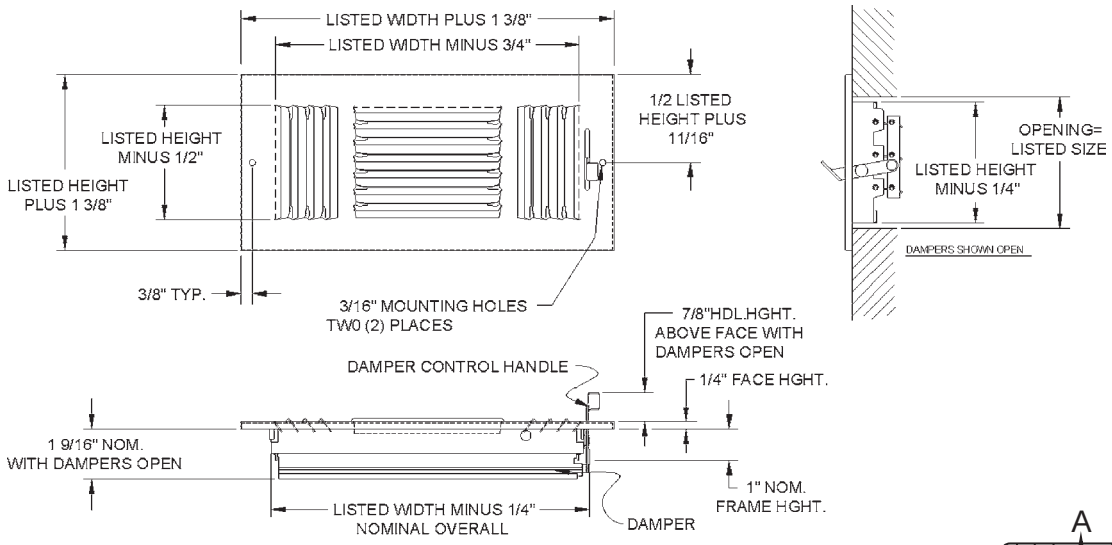

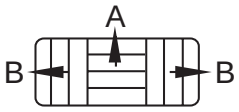

23/A23 SERIES SIDEWALL/CEILING REGISTERS

UNIT SIZE	OVERALL SIZE	FACE VELOCITY	300	400	500	600	700	800	900	1000
		PRESSURE LOSS	.006	.010	.016	.022	.031	.040	.050	.062
6x4	7 3/8 x 5 3/8	Cfm	30	40	50	60	70	80	90	100
Ak .10		Cfm A/B	22/4	30/5	36/7	44/8	50/10	58/11	66/12	72/14
		Throw A/B	4/2	4/3	6/5	8/4	8/6	10/7	12/6	14/7
6x6	7 3/8 x 7 3/8	Cfm	45	60	75	90	105	120	135	150
Ak .15		Cfm A/B	35/5	48/6	57/9	68/11	79/13	92/14	103/16	114/18
		Throw A/B	4/3	6/3	8/4	8/6	10/5	12/6	12/8	16/8
8x4	9 3/8 x 5 3/8	Cfm	39	52	65	78	91	104	117	130
Ak .13		Cfm A/B	21/9	28/12	35/15	42/36	49/21	56/24	65/26	72/29
		Throw A/B	5/2	6/3	7/6	8/6	8/7	9/8	12/8	12/10
8x6	9 3/8 x 7	Cfm	63	84	105	126	147	168	189	210
Ak .21		Cfm A/B	33/15	46/19	57/24	68/29	79/34	90/39	101/44	112/49
		Throw A/B	6/2	7/3	8/4	8/6	9/7	12/8	14/7	16/8
8x8	9 3/8 x 9 3/8	Cfm	87	116	145	174	203	232	261	290
Ak .29		Cfm A/B	47/20	62/27	77/34	92/41	107/48	124/54	139/61	154/68
		Throw A/B	5/4	8/4	10/5	12/6	14/7	16/8	18/9	20/10
10x4	11 3/8 x 5 3/8	Cfm	51	68	85	102	119	136	153	170
Ak .17		Cfm A/B	27/12	36/16	45/20	54/24	63/28	74/31	83/35	92/39
		Throw A/B	5/3	7/3	8/4	8/6	10/7	12/8	14/7	16/9
10x6	11 3/8 x 6 3/8	Cfm	81	108	135	162	189	216	243	270
Ak .27		Cfm A/B	43/19	58/25	73/31	86/38	101/44	116/50	129/57	144/63
		Throw A/B	6/3	8/4	9/6	12/6	14/7	16/8	18/9	20/10
10x8	11 3/8 x 9 3/8	Cfm	114	152	190	228	266	304	342	380
Ak .38		Cfm A/B	60/27	80/36	100/45	120/54	140/63	160/72	180/81	200/90
		Throw A/B	6/4	9/4	12/6	12/8	14/9	18/9	20/10	21/12
10x10	11 3/8 x 11 3/8	Cfm	138	184	230	276	322	368	414	460
Ak .46		Cfm A/B	74/32	100/42	124/53	150/63	174/74	200/84	224/95	250/105
		Throw A/B	8/3	9/6	10/7	14/9	18/9	20/10	22/13	26/13
12x4	13 3/8 x 5 3/8	Cfm	66	88	110	132	154	176	198	220
Ak .22		Cfm A/B	34/16	46/21	58/26	68/32	80/37	92/42	104/47	114/53
		Throw A/B	5/3	8/3	9/4	10/5	12/6	14/7	16/8	18/9
12x6	13 3/8 x 7 3/8	Cfm	102	136	170	204	238	272	306	340
Ak .34		Cfm A/B	54/24	72/32	88/41	106/49	124/57	142/65	160/73	178/81
		Throw A/B	6/4	8/5	10/7	12/8	14/9	18/9	20/10	21/12
12x8	13 3/8 x 9 3/8	Cfm	138	184	230	276	322	368	414	460
Ak .46		Cfm A/B	72/33	96/44	120/55	144/66	168/77	192/88	216/99	240/110
		Throw A/B	8/4	10/5	12/6	14/9	16/10	20/10	23/11	24/13
12x10	13 3/8 x 11 3/8	Cfm	171	228	285	342	399	456	513	570
Ak .57		Cfm A/B	91/40	122/53	153/66	184/79	213/93	244/106	275/119	306/132
		Throw A/B	8/5	11/6	14/8	18/9	20/10	24/10	26/13	28/15

Engineer's specs continued on page 22

23/A23 SERIES SIDEWALL/CEILING REGISTERS

UNIT SIZE	OVERALL SIZE	FACE VELOCITY	300	400	500	600	700	800	900	1000
		PRESSURE LOSS	.006	.010	.016	.022	.031	.040	.050	.062
12x12	13 3/8 x 13 3/8	Cfm	207	276	345	414	483	552	621	690
Ak .69		Cfm A/B	111/48	148/64	185/80	222/96	259/112	294/129	333/144	370/160
		Throw A/B	8/6	12/7	16/8	18/10	22/11	24/14	28/15	32/17
14x4	15 3/8 x 5 3/8	Cfm	81	108	135	162	189	216	243	270
Ak .27		Cfm A/B	33/24	44/32	57/39	68/47	79/55	90/63	101/761	112/79
		Throw A/B	6/3	8/4	8/6	11/6	13/6	15/7	17/8	19/10
14x6	15 3/8 x 7 3/8	Cfm	111	148	185	222	259	296	333	370
Ak .37		Cfm A/B	53/29	70/39	89/48	106/58	125/67	142/77	159/87	178/96
		Throw A/B	7/3	10/5	12/5	14/7	16/8	17/11	21/10	23/12
14x8	15 3/8 x 9 3/8	Cfm	153	204	255	306	357	408	459	510
Ak .51		Cfm A/B	73/40	98/53	123/66	146/80	171/93	194/107	219/120	242/134
		Throw A/B	8/4	10/7	14/7	17/9	19/9	22/11	25/12	28/14
14x10	15 3/8 x 11 3/8	Cfm	207	276	345	414	483	552	621	690
Ak .69		Cfm A/B	93/57	122/77	153/96	184/115	213/135	244/154	275/173	306/192
		Throw A/B	8/6	12/7	16/8	19/9	22/11	26/13	29/15	32/16
14x12	15 3/8 x 13 3/8	Cfm	246	328	410	492	574	656	738	820
Ak .82		Cfm A/B	110/68	148/90	184/113	222/135	258/158	296/180	334/202	370/225
		Throw A/B	10/5	14/7	18/9	20/12	24/13	28/14	32/15	34/17
14x14	15 3/8 x 15 3/8	Cfm	267	356	445	534	623	712	801	890
Ak .89		Cfm A/B	131/68	174/91	217/114	260/137	303/160	348/182	391/205	434/228
		Throw A/B	12/6	16/8	22/11	26/13	30/15	34/18	38/20	43/21
16x6	17 3/8 x 7 3/8	Cfm	141	188	235	282	329	376	423	470
Ak .47		Cfm A/B	63/39	84/52	105/65	126/78	147/91	168/104	189/117	210/130
		Throw A/B	6/3	9/5	10/6	12/8	16/7	18/8	19/9	22/11
16x8	17 3/8 x 9 3/8	Cfm	192	256	320	384	448	512	576	640
Ak .64		Cfm A/B	86/53	114/71	144/88	172/106	202/123	230/141	258/159	286/177
		Throw A/B	8/5	12/6	16/7	19/9	20/11	24/12	26/14	30/15
16x16	17 3/8 x 17 3/8	Cfm	387	516	645	774	903	1032	1161	1290
Ak 1.29		Cfm A/B	177/105	236/140	295/175	354/210	413/245	470/281	529/316	588/351
		Throw A/B	12/8	18/9	25/12	30/15	34/17	38/20	42/22	48/24

Terminal Velocity of 75 fpm Always specify width by height

24

SIDEWALL/CEILING REGISTERS SQUARE, 4-WAY DEFLECTION

Steel Construction
1/2" Spaced Fins
Lanced Face
Multi-Shutter Damper
White Finish

A24

SIDEWALL/CEILING REGISTERS SQUARE, 4-WAY DEFLECTION

Aluminum Construction
1/2" Spaced Fins
Lanced Face
Multi-Shutter Damper
White Finish

Engineer's specs on page 23

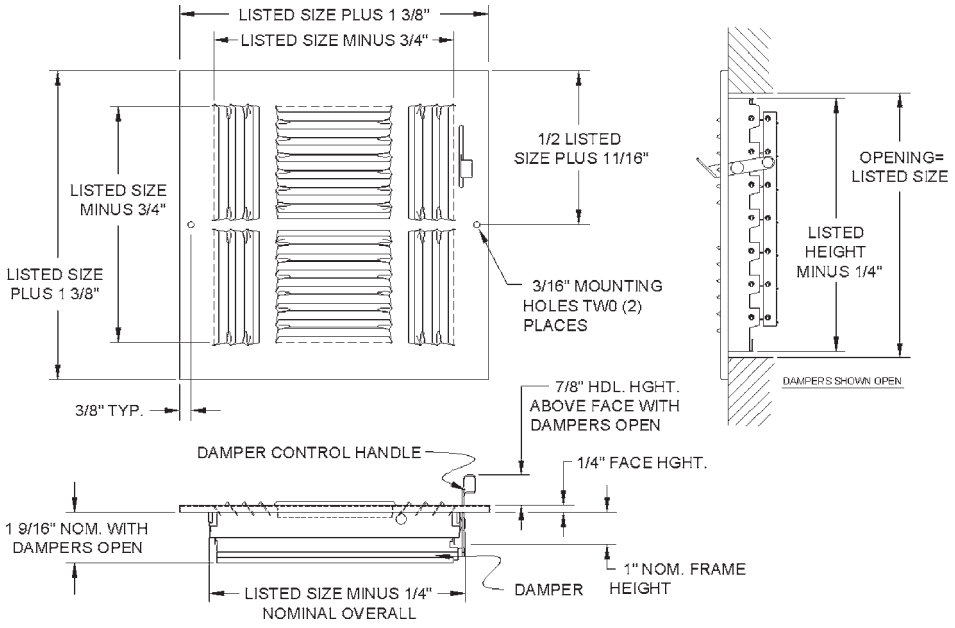

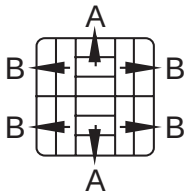

24/A24 SERIES SIDEWALL/CEILING REGISTERS

UNIT SIZE	OVERALL SIZE	FACE VELOCITY	300	400	500	600	700	800	900	1000
		PRESSURE LOSS	.006	.010	.016	.022	.031	.040	.050	.062
6x6	7 3/8 x 7 3/8	Total Cfm	39	52	65	78	91	104	117	130
Ak .13		Cfm A/B	15/4	20/6	24/8	30/9	34/11	40/12	44/14	50/15
		Throw A/B	3/3	5/4	6/5	8/6	9/7	10/8	12/10	13/11
8x8	9 3/8 x 9 3/8	Total Cfm	78	104	130	156	182	208	234	260
Ak .26		Cfm A/B	21/18	28/24	35/30	42/36	49/42	56/48	63/54	71/61
		Throw A/B	4/4	7/6	9/8	11/9	13/11	15/12	16/13	18/15
10x10	11 3/8 x 11 3/8	Total Cfm	132	176	220	264	308	352	396	440
Ak .44		Cfm A/B	35/31	46/42	58/52	70/62	82/72	93/83	106/94	118/105
		Throw A/B	7/5	9/7	12/9	14/11	17/14	20/16	22/18	25/21
12x12	13 3/8 x 13 3/8	Total Cfm	204	272	340	408	476	544	612	680
Ak .68		Cfm A/B	54/48	71/65	89/81	107/97	125/113	143/129	158/144	176/160
		Throw A/B	9/7	12/9	15/12	18/14	21/17	24/19	28/22	29/24
14x14	15 3/8 x 15 3/8	Total Cfm	284	380	474	570	664	760	855	950
Ak .95		Cfm A/B	63/79	84/106	104/133	126/159	146/186	167/213	187/239	208/266
		Throw A/B	9/8	12/11	15/13	18/16	21/19	25/21	28/24	31/27
16x16	17 3/8 x 17 3/8	Total Cfm	380	508	634	762	888	1016	1143	1270
Ak 1.27		Cfm A/B	85/105	113/139	142/175	171/210	199/245	228/280	256/315	284/350
		Throw A/B	11/9	14/12	18/15	22/18	26/21	29/24	33/26	36/30

Terminal Velocity of 75 fpm Always specify width by height

244 SIDEWALL/CEILING REGISTERS

SQUARE, 4-WAY DEFLECTION

Steel Construction
1/2" Spaced Fins
Lanced Face
Multi-Shutter Damper
White Finish

Engineer's specs on page 24

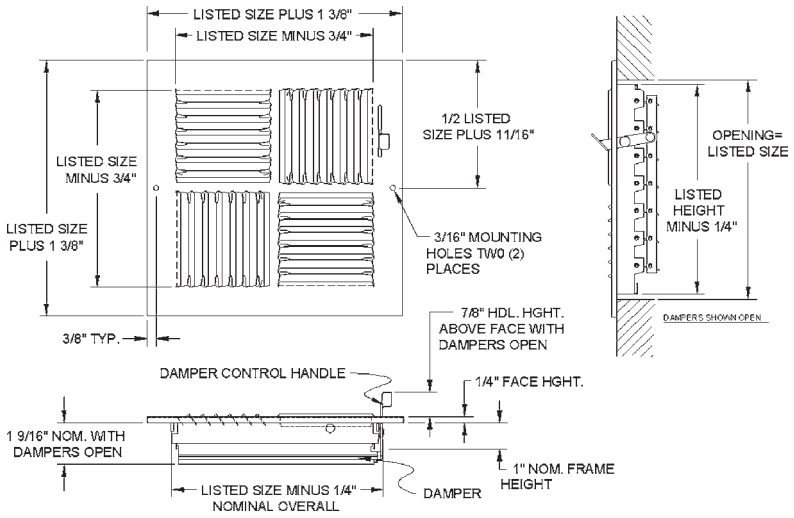

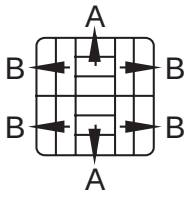

244 SERIES SIDEWALL/CEILING REGISTERS

UNIT SIZE	OVERALL SIZE	FACE VELOCITY	300	400	500	600	700	800	900	1000
		PRESSURE LOSS	.006	.010	.016	.022	.031	.040	.050	.062
6x6	7 3/8 x 7 3/8	Total Cfm	39	52	65	78	91	104	117	130
Ak .13		Cfm A/B	15/4	20/6	24/8	30/9	34/11	40/12	44/14	50/15
		Throw A/B	3/3	5/4	6/5	8/6	9/7	10/8	12/10	13/11
8x8	9 3/8 x 9 3/8	Total Cfm	78	104	130	156	182	208	234	260
Ak .26		Cfm A/B	21/18	28/24	35/30	42/36	49/42	56/48	63/54	70/60
		Throw A/B	4/4	7/6	9/8	11/9	13/11	15/12	16/13	18/15
10x10	11 3/8 x 11 3/8	Total Cfm	132	176	220	264	308	352	396	440
Ak .44		Cfm A/B	35/31	47/41	58/52	70/62	82/72	93/83	105/93	116/104
		Throw A/B	7/5	9/7	12/9	14/11	17/14	20/16	22/18	25/21
12x12	13 3/8 x 13 3/8	Total Cfm	201	268	335	402	469	536	603	670
Ak .67		Cfm A/B	53/47	70/64	88/79	105/96	122/112	141/127	158/143	176/159
		Throw A/B	9/7	12/9	15/12	18/14	21/17	24/19	28/22	29/24
14x14	15 3/8 x 15 3/8	Total Cfm	282	376	470	564	658	752	846	940
Ak .94		Cfm A/B	63/78	83/105	103/132	124/158	144/185	165/211	186/237	206/264
		Throw A/B	9/8	12/11	15/13	18/16	21/19	25/21	28/24	31/27
16x16	17 3/8 x 17 3/8	Total Cfm	360	480	600	720	840	960	1080	1200
Ak 1.2		Cfm A/B	80/100	110/130	134/166	160/200	187/233	214/266	240/300	267/333
		Throw A/B	11/9	14/12	18/15	22/18	26/21	29/24	33/26	36/30

Terminal Velocity of 75 fpm Always specify width by height

32 SIDEWALL/CEILING REGISTERS
2-WAY DEFLECTION

Steel Construction
1/3" Spaced Fins
Lanced Face
Multi-Shutter Damper
White Finish

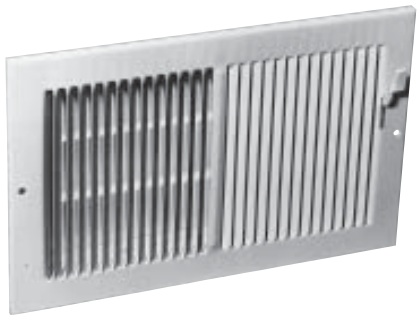

Engineer's specs on page 25

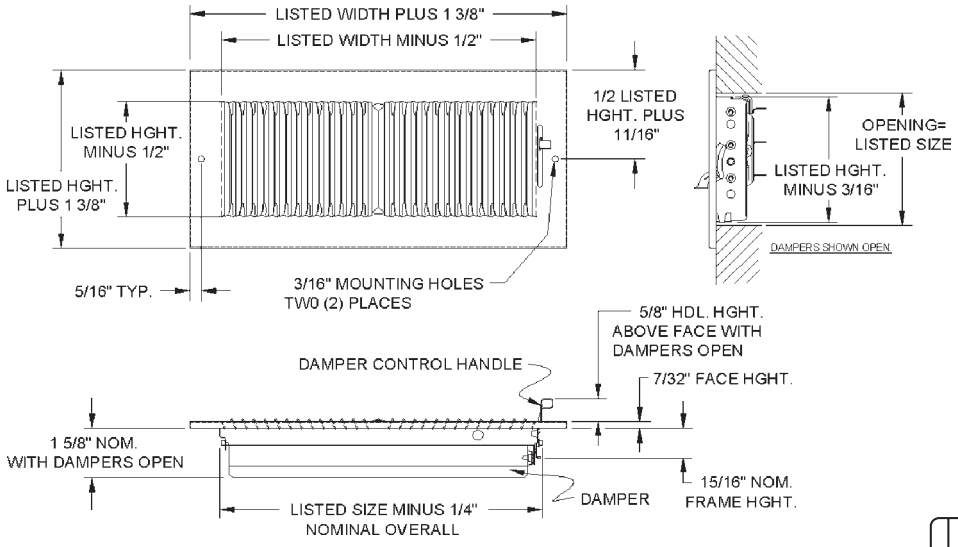

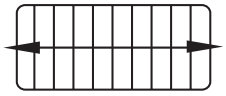

32 SERIES SIDEWALL/CEILING REGISTERS

UNIT SIZE	OVERALL SIZE	FACE VELOCITY	300	400	500	600	700	800	900	1000
		PRESSURE LOSS	.006	.010	.016	.022	.031	.040	.050	.062
6x4	7 3/8 x 5 3/8	Cfm	18	24	30	36	42	48	54	60
Ak .06		Throw	3	4	5	7	8	9	10	11
6x6	7 3/8 x 7 3/8	Cfm	51	68	85	102	119	136	153	170
Ak .17		Throw	5	6	7	9	10	12	13	15
8x4	9 3/8 x 5 3/8	Cfm	45	60	75	90	105	120	135	150
Ak .15		Throw	4	5	7	8	9	11	12	13
8x5	9 3/8 x 6 3/8	Cfm	57	76	95	114	133	152	171	190
Ak .19		Throw	5	6.5	8	9.5	11.5	13	14.5	16
8x6	9 3/8 x 7 3/8	Cfm	69	92	115	138	161	184	207	230
Ak .23		Throw	5	7	8	10	12	14	15	17
8x8	9 3/8 x 9 3/8	Cfm	93	124	155	186	217	248	279	310
Ak .31		Throw	6	7	9	11	13	15	17	19
10x4	11 3/8 x 5 3/8	Cfm	54	72	90	108	126	144	162	180
Ak .18		Throw	5	6	8	9	11	12	13	14
10x5	11 3/8 x 6 3/8	Cfm	72	96	120	144	168	192	216	240
Ak .24		Throw	5	7	8	10	12	13	15	16
10x6	11 3/8 x 7 3/8	Cfm	87	116	145	174	203	232	261	290
Ak .29		Throw	6	8	9	11	13	15	17	19
10x8	11 3/8 x 9 3/8	Cfm	120	160	200	240	280	320	360	400
Ak .40		Throw	7	8	10	12	14	16	17	21
10x10	11 3/8 x 11 3/8	Cfm	141	188	235	282	329	376	423	470
Ak .47		Throw	7	9	12	14	16	18	20	23
12x4	13 3/8 x 5 3/8	Cfm	66	88	110	132	154	176	198	220
Ak .22		Throw	5	7	8	10	12	14	15	17
12x5	13 3/8 x 6 3/8	Cfm	87	116	145	174	203	232	261	290
Ak .29		Throw	6	8	10	12	14	16	18	20
12x6	13 3/8 x 7 3/8	Cfm	105	140	175	210	245	280	315	350
Ak .35		Throw	7	8	10	12	15	17	19	21
12x8	13 3/8 x 9 3/8	Cfm	144	192	240	288	336	384	432	480
Ak .48		Throw	7	9	11	13	18	17	19	22
12x10	13 3/8 x 11 3/8	Cfm	171	228	285	342	399	456	513	570
Ak .57		Throw	8	11	13	16	19	22	25	28
12x12	13 3/8 x 13 3/8	Cfm	210	280	350	420	490	560	630	700
Ak .70		Throw	9	11	14	17	20	22	25	29
14x4	15 3/8 x 5 3/8	Cfm	78	104	130	156	182	208	234	260
Ak .26		Throw	5	7	9	11	13	15	17	18
14x5	15 3/8 x 6 3/8	Cfm	102	136	170	204	238	272	306	340
Ak .34		Throw	6.5	8.5	11	13	15.5	17.5	19.5	22
14x6	15 3/8 x 7 3/8	Cfm	123	164	205	246	287	328	369	410
Ak .41		Throw	7	8	11	13	16	18	20	23

Engineer's specs continued on page 26

32 SERIES SIDEWALL/CEILING REGISTERS (CONT'D)

UNIT SIZE	OVERALL SIZE	FACE VELOCITY	300	400	500	600	700	800	900	1000
		PRESSURE LOSS	.006	.010	.016	.022	.031	.040	.050	.062
14x8	15 3/8 x 9 3/8	Cfm	168	224	280	336	392	448	504	560
Ak .56		Throw	8	9	12	14	17	19	21	24
14x10	15 3/8 x 11 3/8	Cfm	201	268	335	402	469	536	603	670
Ak .67		Throw	9	11	13	16	19	22	25	28
14x12	15 3/8 x 13 3/8	Cfm	249	332	415	498	581	664	747	830
Ak .83		Throw	9	12	14	18	22	24	27	31
14x14	15 3/8 x 15 3/8	Cfm	294	392	490	588	686	784	882	980
Ak .98		Throw	9	15	19	23	27	31	34	38
16x4	17 3/8 x 5 3/8	Cfm	90	120	150	180	210	240	270	300
Ak .30		Throw	6	9	11	14	16	19	21	24
16x6	17 3/8 x 7 3/8	Cfm	141	188	235	282	329	376	423	470
Ak .47		Throw	7	10	12	15	17	20	22	25
16x8	17 3/8 x 9 3/8	Cfm	195	260	325	390	455	520	585	650
Ak .65		Throw	8	10	13	15	18	20	22	25
16x16	17 3/8 x 17 3/8	Cfm	390	520	650	780	910	1040	1170	1300
Ak 1.30		Throw	12	15	20	23	28	31	33	39
18x6	19 3/8 x 7 3/8	Cfm	162	216	270	324	378	432	486	540
Ak .54		Throw	8	11	13	16	19	22	24	27
18x8	19 3/8 x 9 3/8	Cfm	219	292	365	438	511	584	657	730
Ak .73		Throw	9	11	13	16	19	22	25	28
20x6	21 3/8 x 7 3/8	Cfm	180	240	300	360	420	480	540	600
Ak .60		Throw	8	11	14	16	20	23	25	28
20x8	21 3/8 x 9 3/8	Cfm	246	328	410	492	574	656	738	820
Ak .82		Throw	9	12	15	18	21	23	26	29
24x6	25 3/8 x 7 3/8	Cfm	216	288	360	432	504	576	648	720
Ak .72		Throw	9	12	15	18	21	23	26	29
24x8	25 3/8 x 9 3/8	Cfm	297	384	495	594	693	792	891	990
Ak .99		Throw	10	13	17	19	23	25	28	31
30x6	31 3/8 x 7 3/8	Cfm	273	364	455	546	637	728	819	910
Ak .91		Throw	9	15	19	23	27	31	34	38
30x8	31 3/8 x 9 3/8	Cfm	372	496	620	744	868	992	1116	1240
Ak 1.24		Throw	12	15	20	23	28	31	33	39

Terminal Velocity of 75 fpm Always specify width by height

33 SIDEWALL/CEILING REGISTERS
3-WAY DEFLECTION

Steel Construction
1/3" Spaced Fins
Lanced Face
Multi-Shutter Damper
White Finish

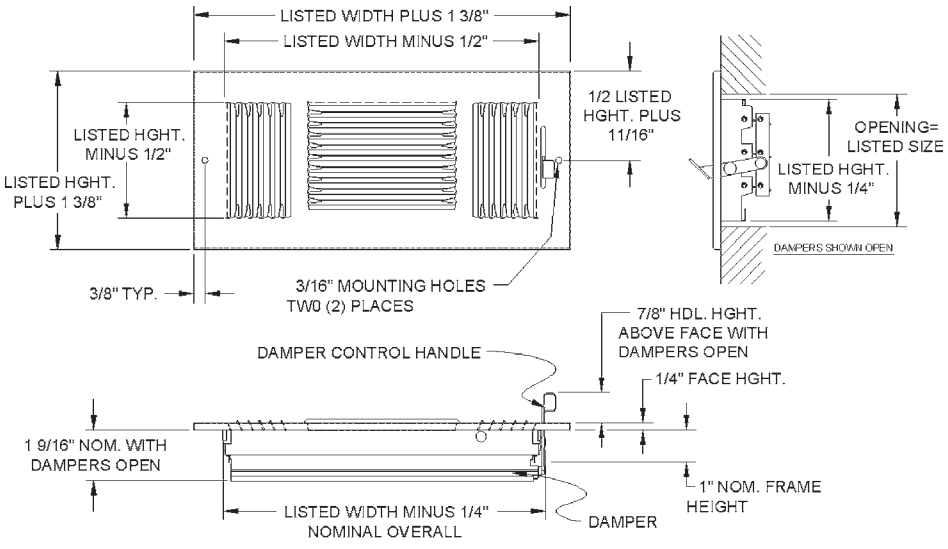

Engineer's specs on page 27

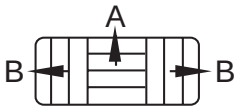

33 SERIES SIDEWALL/CEILING REGISTERS

UNIT SIZE	OVERALL SIZE	FACE VELOCITY	300	400	500	600	700	800	900	1000
		PRESSURE LOSS	.006	.010	.016	.022	.031	.040	.050	.062
6x4	7 3/8 x 5 3/8	Cfm	30	40	50	60	70	80	90	100
Ak .10		Throw A/B	4/2	4/3	6/5	8/4	8/6	10/7	12/6	14/7
6x6	7 3/8 x 7 3/8	Cfm	45	60	75	90	105	120	135	150
Ak .15		Throw A/B	4/3	6/3	8/4	8/6	10/5	12/6	12/8	16/8
8x4	9 3/8 x 5 3/8	Cfm	42	56	70	84	98	112	126	140
Ak .14		Throw A/B	5/2	6/3	7/6	8/6	8/7	9/8	12/8	12/10
8x6	9 3/8 x 7 3/8	Cfm	66	88	110	132	154	176	198	220
Ak .22		Throw A/B	6/2	7/3	8/4	8/6	9/7	12/8	14/7	16/8
8x8	9 3/8 x 9 3/8	Cfm	87	116	145	174	203	232	261	290
Ak .29		Throw A/B	5/4	8/4	10/5	12/6	14/7	16/8	18/9	20/10
10x4	11 3/8 x 5 3/8	Cfm	51	68	85	102	119	136	153	170
Ak .17		Throw A/B	5/3	7/3	8/4	8/6	10/7	12/8	14/7	16/9
10x6	11 3/8 x 7 3/8	Cfm	78	104	130	156	182	208	234	260
Ak .26		Throw A/B	6/3	8/4	9/6	12/6	14/7	16/8	18/9	20/10
10x8	11 3/8 x 9 3/8	Cfm	108	144	180	216	252	288	324	360
Ak .36		Throw A/B	6/4	9/4	12/6	12/8	14/9	18/9	20/10	21/12
10x10	11 3/8 x 11 3/8	Cfm	132	176	220	264	308	352	396	440
Ak .44		Throw A/B	8/3	9/6	10/7	14/9	18/9	20/10	22/13	26/13
12x4	13 3/8 x 5 3/8	Cfm	66	88	110	132	154	176	198	220
Ak .22		Throw A/B	5/3	8/3	9/4	10/5	12/6	14/7	16/8	18/9
12x6	13 3/8 x 7 3/8	Cfm	102	136	170	204	238	272	306	340
Ak .34		Throw A/B	6/4	8/5	10/7	12/8	14/9	18/9	20/10	21/12
12x8	13 3/8 x 9 3/8	Cfm	141	188	235	282	329	376	423	470
Ak .47		Throw A/B	8/4	10/5	12/6	14/9	16/10	20/10	23/11	24/13
12x10	13 3/8 x 11 3/8	Cfm	171	228	285	342	399	456	513	570
Ak .57		Throw A/B	8/5	11/6	14/8	18/9	20/10	24/10	26/13	28/15
12x12	13 3/8 x 13 3/8	Cfm	207	276	345	414	483	552	621	690
Ak .69		Throw A/B	8/6	12/7	16/8	18/10	22/11	24/14	28/15	32/17
14x4	15 3/8 x 5 3/8	Cfm	72	96	120	144	168	192	216	240
Ak .24		Throw A/B	6/3	8/4	8/6	11/6	13/6	15/7	17/8	19/10
14x6	15 3/8 x 7 3/8	Cfm	114	152	190	228	266	304	306	340
Ak .38		Throw A/B	7/3	10/5	12/5	14/7	16/8	17/11	21/10	23/12
14x8	15 3/8 x 9 3/8	Cfm	156	208	260	312	364	416	468	520
Ak .52		Throw A/B	8/4	10/7	14/7	17/9	19/9	22/11	25/12	28/14
14x10	15 3/8 x 11 3/8	Cfm	192	256	320	384	448	512	576	640
Ak .64		Throw A/B	8/6	12/7	16/8	19/9	22/11	26/13	29/15	32/16
14x12	15 3/8 x 13 3/8	Cfm	231	308	385	462	539	616	693	770
Ak .77		Throw A/B	10/5	14/7	18/9	20/12	24/13	28/14	32/15	34/17
14x14	15 3/8 x 15 3/8	Cfm	273	364	455	546	637	728	819	910
Ak .91		Throw A/B	12/6	16/8	22/11	26/13	30/15	34/18	38/20	43/21
16x6	17 3/8 x 7 3/8	Cfm	114	152	190	228	266	304	306	340
Ak .38		Throw A/B	6/3	9/5	10/6	12/8	16/7	18/8	19/9	22/11
16x8	17 3/8 x 9 3/8	Cfm	186	248	310	372	434	496	558	620
Ak .62		Throw A/B	8/5	12/6	16/7	19/9	20/11	24/12	26/14	30/15
16x16	17 3/8 x 17 3/8	Cfm	372	496	620	744	868	992	1116	1240
Ak 1.24		Throw A/B	12/8	18/9	25/12	30/15	34/17	38/20	42/22	48/24

Terminal Velocity of 50 fpm Always specify width by height

Made In America

34 SIDEWALL/CEILING REGISTERS
SQUARE, 4-WAY DEFLECTION

Steel Construction
1/3" Spaced Fins
Lanced Face
Multi-Shutter Damper
White Finish

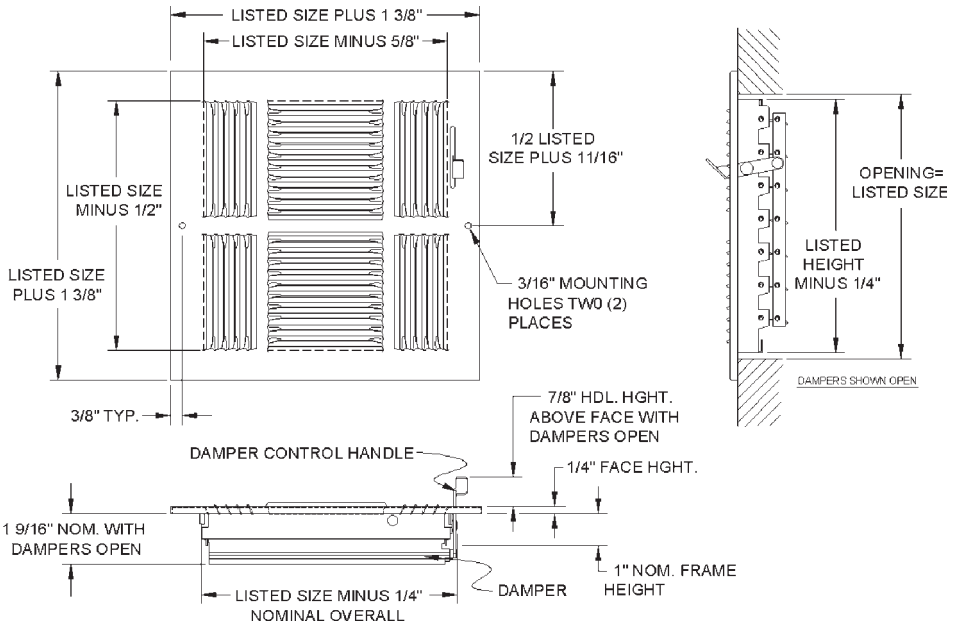

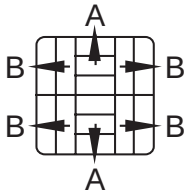

34 SERIES SIDEWALL/CEILING REGISTERS

UNIT SIZE	OVERALL SIZE	FACE VELOCITY	300	400	500	600	700	800	900	1000
		PRESSURE LOSS	.006	.010	.016	.022	.031	.040	.050	.062
6x6	7 3/8 x 7 3/8	Cfm	45	60	75	90	105	120	135	150
Ak .15		Throw A/B	3/3	5/4	6/5	8/6	9/7	10/8	12/10	13/11
8x8	9 3/8 x 9 3/8	Cfm	84	112	140	168	196	224	252	280
Ak .28		Throw A/B	4/4	7/6	9/8	11/9	13/11	15/12	16/13	18/15
10x10	11 3/8 x 11 3/8	Cfm	132	176	220	264	308	352	396	440
Ak .44		Throw A/B	7/5	9/7	12/9	14/11	17/14	20/16	22/18	25/21
12x12	13 3/8 x 13 3/8	Cfm	204	272	340	408	476	544	612	680
Ak .68		Throw A/B	9/7	12/9	15/12	18/14	21/17	24/19	28/22	29/24
14x14	15 3/8 x 15 3/8	Cfm	270	360	450	540	630	720	810	900
Ak .90		Throw A/B	9/8	12/11	15/13	18/16	21/19	25/21	28/24	31/27
16x16	17 3/8 x 17 3/8	Cfm	372	496	620	744	868	992	1116	1240
Ak 1.24		Throw A/B	11/9	14/12	18/15	22/18	26/21	29/24	33/26	36/30

Terminal Velocity of 75 fpm Always specify width by height

C1H CURVED BLADE SIDEWALL/ CEILING REGISTERS

Steel Construction
Curved Blades
1-Way, Horizontal Throw
Lanced Face
Multi-Shuttered Damper
White Finish

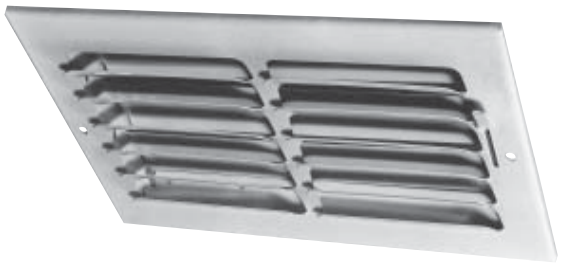

AC1H CURVED BLADE SIDEWALL/ CEILING REGISTERS

Aluminum Construction
Curved Blades
1-Way, Horizontal Throw
Lanced Face
Multi-Shuttered Damper
White Finish

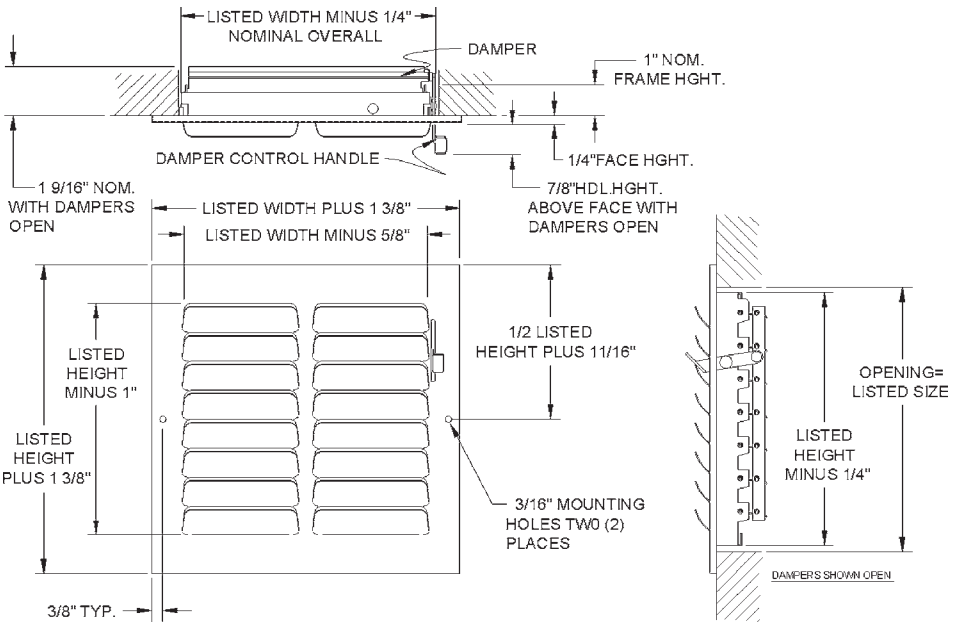

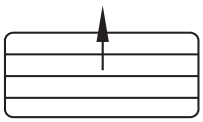

C1H/AC1H SERIES CURVED BLADE SIDEWALL/CEILING REGISTERS

UNIT SIZE	OVERALL SIZE	FACE VELOCITY	300	400	500	600	700	800	900	1000
		PRESSURE LOSS	.006	.010	.016	.022	.031	.040	.050	.062
6x4	7 3/8 x 5 3/8	Cfm	17	22	28	34	39	45	50	56
Ak .056		Throw	4	6	7	8.5	10	11.5	13	16
6x6	7 3/8 x 7 3/8	Cfm	29	39	49	58	68	78	87	97
Ak .097		Throw	4.5	6.5	8.5	10	11	13	15	17
8x4	9 3/8 x 5 3/8	Cfm	23	30	38	46	53	61	68	76
Ak .076		Throw	5	5.5	8	9.5	11	13	14	16
8x6	9 3/8 x 7 3/8	Cfm	38	50	63	75	88	100	113	125
Ak .125		Throw	6	8	10	12	14	16	17	19

Engineers specs continued on page 30

C1H/AC1H SERIES CURVED BLADE SIDEWALL/CEILING REGISTERS (CONT'D)

UNIT SIZE	OVERALL SIZE	FACE VELOCITY	300	400	500	600	700	800	900	1000
		PRESSURE LOSS	.006	.010	.016	.022	.031	.040	.050	.062
8x8	9 3/8 x 9 3/8	Cfm	48	64	80	96	112	128	144	160
Ak .160		Throw	6.5	9	11	13	16	18	20	22
10x4	11 3/8 x 5 3/8	Cfm	31	42	52	62	73	83	94	104
Ak .104		Throw	5.5	7	9	11	13	15	16	18
10x6	11 3/8 x 7 3/8	Cfm	46	61	77	92	107	122	138	153
Ak .153		Throw	6.5	8.5	11	13	15	17	20	22
10x8	11 3/8 x 9 3/8	Cfm	62	83	104	125	146	166	187	208
Ak .208		Throw	8.5	11	14	17	20	23	26	28
10x10	11 3/8 x 11 3/8	Cfm	86	114	143	171	200	228	257	285
Ak .285		Throw	8.5	11	14	17	20	23	26	28
12x4	13 3/8 x 5 3/8	Cfm	38	50	63	75	88	100	113	125
Ak .125		Throw	6	8	10	12	14	16	17	20
12x6	13 3/8 x 7 3/8	Cfm	58	78	97	116	136	155	175	194
Ak .194		Throw	7	9	12	14	16	19	21	24
12x8	13 3/8 x 9 3/8	Cfm	77	103	129	154	180	206	231	257
Ak .257		Throw	8.5	11	14	16	19	22	25	27
12x10	13 3/8 x 11 3/8	Cfm	106	142	177	212	248	203	229	254
Ak .354		Throw	9	12	15.5	18	21.5	24.5	28	30.5
12x12	13 3/8 x 13 3/8	Cfm	125	167	209	250	292	334	375	417
Ak .417		Throw	10	13	17	20	24	27	31	34
14x4	15 3/8 x 5 3/8	Cfm	46	61	77	92	107	122	138	153
Ak .153		Throw	6	8.5	11	13	15	17	18	21
14x6	15 3/8 x 7 3/8	Cfm	69	92	115	137	160	183	206	229
Ak .229		Throw	8	10	13	15	18	21	23	25
14x8	15 3/8 x 9 3/8	Cfm	92	122	153	184	214	245	275	306
Ak .306		Throw	9	11	15	17	20	23	26	29
14x10	15 3/8 x 11 3/8	Cfm	127	170	212	254	297	339	382	424
Ak .424		Throw	10	12	16	19	23	26	29	33
14x12	15 3/8 x 13 3/8	Cfm	158	211	264	317	370	422	475	528
Ak .528		Throw	11	14	18	21	25	29	33	37
14x14	15 3/8 x 15 3/8	Cfm	173	230	288	347	403	461	518	576
Ak .576		Throw	12	16	20	24	28	31	36	40
16x4	17 3/8 x 5 3/8	Cfm	48	64	80	96	112	128	144	160
Ak .160		Throw	6.5	9	11	13	16	18	20	22
16x6	17 3/8 x 7 3/8	Cfm	77	103	129	154	180	206	231	257
Ak .257		Throw	9	10	13	16	17.5	20.5	23	25
16x8	17 3/8 x 9 3/8	Cfm	98	130	163	196	228	261	293	326
Ak .326		Throw	9	11	14	17	19.5	23	24.5	27.5
16x10	17 3/8 x 11 3/8	Cfm	131	175	219	263	307	350	394	438
Ak .438		Throw	10	13	16.5	20	23	26	29	32
16x12	17 3/8 x 13 3/8	Cfm	158	211	264	317	370	422	475	528
Ak .528		Throw	11	14.5	18	22	25	28	32	35
16x14	17 3/8 x 15 3/8	Cfm	171	228	285	342	399	456	513	570
Ak .570		Throw	12	16	19	23	28	31	35	38
16x16	17 3/8 x 17 3/8	Cfm	188	261	326	391	456	522	587	652
Ak .652		Throw	13	17.5	20	25	29	33	38	42

Terminal Velocity of 75 fpm Always specify width by height

CONTINENTAL THE REGISTER PEOPLE

Quality - See the Difference

C2H CURVED BLADE SIDEWALL/ CEILING REGISTERS

Steel Construction
Curved Blades
2-Way, Horizontal Throw
Lanced Face
Multi-Shuttered Damper
White Finish

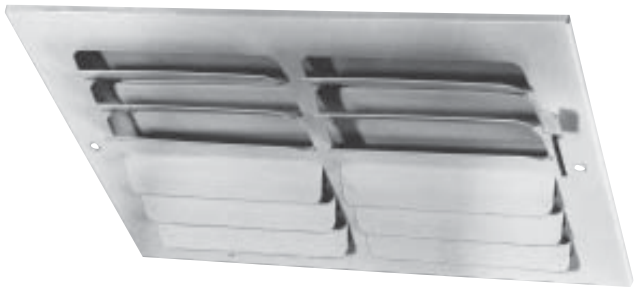

AC2H CURVED BLADE SIDEWALL/ CEILING REGISTERS

Aluminum Construction
Curved Blades
2-Way, Horizontal Throw
Lanced Face
Multi-Shuttered Damper
White Finish

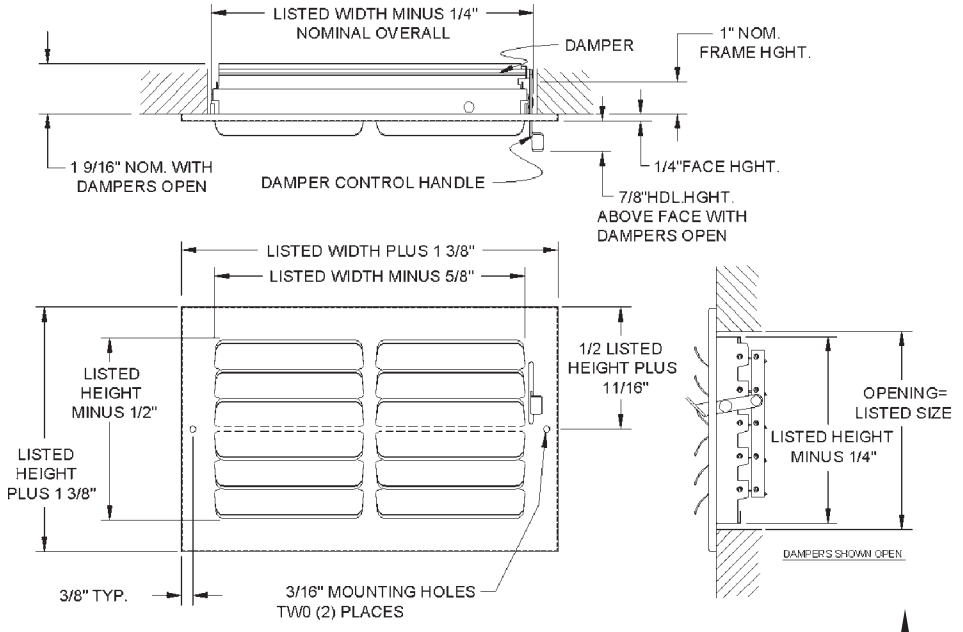

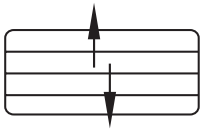

C2H/AC2H SERIES CURVED BLADE SIDEWALL/CEILING REGISTERS

UNIT SIZE	OVERALL SIZE	FACE VELOCITY	300	400	500	600	700	800	900	1000
		PRESSURE LOSS	.006	.010	.016	.022	.031	.040	.050	.062
6x4	7 3/8 x 5 3/8	Cfm	17	22	28	34	39	45	50	56
Ak .056		Throw	3	4.5	5	7	8	9	10	11
6x6	7 3/8 x 7 3/8	Cfm	29	39	49	58	68	78	87	97
Ak .097		Throw	3.5	5	6	7.5	8.5	9.5	11	12
8x4	9 3/8 x 5 3/8	Cfm	23	30	38	46	53	61	68	76
Ak .076		Throw	3.5	4.5	6	7	8	9.5	11	12
8x6	9 3/8 x 7 3/8	Cfm	38	50	63	75	88	100	113	125
Ak .125		Throw	4	5.5	7	8.5	10	11	13	14
8x8	9 3/8 x 9 3/8	Cfm	48	64	80	96	112	128	144	160
Ak .160		Throw	4.5	6.5	8	9.5	11	13	14	16
10x4	11 3/8 x 5 3/8	Cfm	31	42	52	62	73	83	94	104
Ak .104		Throw	4	5.5	7	8.5	10	11	13	14
10x6	11 3/8 x 7 3/8	Cfm	46	61	77	92	107	122	138	153
Ak .153		Throw	5	6.5	8	9.5	11	13	15	16

Engineers specs continued on page 32

C2H/AC2H SERIES CURVED BLADE SIDEWALL/CEILING REGISTERS (CONT'D)

UNIT SIZE	OVERALL SIZE	FACE VELOCITY	300	400	500	600	700	800	900	1000
		PRESSURE LOSS	.006	.010	.016	.022	.031	.040	.050	.062
10x8	11 3/8 x 9 3/8	Cfm	62	83	104	125	146	166	187	208
Ak .208		Throw	5.5	7.5	9	11	13	15	16	18
10x10	11 3/8 x 11 3/8	Cfm	86	114	143	171	200	228	257	285
Ak .285		Throw	6	9	10	12	14	16	18	20
12x4	13 3/8 x 5 3/8	Cfm	38	50	63	75	88	100	113	125
Ak .125		Throw	4.5	6	7.5	9	11	12	13	15
12x6	13 3/8 x 7 3/8	Cfm	58	78	97	116	136	155	175	194
Ak .194		Throw	5.5	7	9	10	12	14	16	18
12x8	13 3/8 x 9 3/8	Cfm	77	103	129	154	180	206	231	257
Ak .257		Throw	6	8	10	12	14	16	18	20
12x10	13 3/8 x 11 3/8	Cfm	106	142	177	212	248	203	229	254
Ak .354		Throw	6.5	8.5	11	13	15.5	17.5	20	22
12x12	13 3/8 x 13 3/8	Cfm	125	167	209	250	292	334	375	417
Ak .417		Throw	7	9.5	12	14	17	19	22	24
14x4	15 3/8 x 5 3/8	Cfm	46	61	77	92	107	122	138	153
Ak .153		Throw	4.5	6.5	8	10	12	13	14	16
14x6	15 3/8 x 7 3/8	Cfm	69	92	115	137	160	183	206	229
Ak .229		Throw	6	7.5	9.5	11	13	15	17	19
14x8	15 3/8 x 9 3/8	Cfm	92	122	153	184	214	245	275	306
Ak .306		Throw	6.5	8.5	11	13	15	17	19	21
14x10	15 3/8 x 11 3/8	Cfm	127	170	212	254	297	339	382	424
Ak .424		Throw	7	9	12	14.5	16.5	18.5	21	23.5
14x12	15 3/8 x 13 3/8	Cfm	158	211	264	317	370	422	475	528
Ak .528		Throw	7.5	10	13	16	17.5	20.5	23.5	25.5
14x14	15 3/8 x 15 3/8	Cfm	173	230	288	347	403	461	518	576
Ak .576		Throw	8.5	11	14	17	19	22	26	28
16x4	17 3/8 x 5 3/8	Cfm	48	64	80	96	112	128	144	160
Ak .160		Throw	5	7	9	10	12.5	14	15	16.5
16x6	17 3/8 x 7 3/8	Cfm	77	103	129	154	180	206	231	257
Ak .257		Throw	6	7.5	9.5	11	14	15	16	17.5
16x8	17 3/8 x 9 3/8	Cfm	98	130	163	196	228	261	293	326
Ak .326		Throw	6.5	8	10	12.5	15	16	18	20
16x10	17 3/8 x 11 3/8	Cfm	131	175	219	263	307	350	394	438
Ak .438		Throw	7.5	9	11	13.516	16	17.5	20	22.5
16x12	17 3/8 x 13 3/8	Cfm	158	211	264	317	370	422	475	528
Ak .528		Throw	8.5	9.5	12.5	15	17.5	20	22.5	24.5
16x14	17 3/8 x 15 3/8	Cfm	171	228	285	342	399	456	513	570
Ak .570		Throw	9	10	13.5	16	19	22.5	25	26.5
16x16	17 3/8 x 17 3/8	Cfm	188	261	326	391	456	522	587	652
Ak .652		Throw	10	11	15	17.5	20	24	26	29

Terminal Velocity of 75 fpm Always specify width by height

C3 CURVED BLADE SIDEWALL/ CEILING REGISTERS

Steel Construction
Curved Blades
3-Way Throw
Lanced Face
Multi-Shuttered Damper
White Finish

AC3 CURVED BLADE SIDEWALL/ CEILING REGISTERS

Aluminum Construction
Curved Blades
3-Way Throw
Lanced Face
Multi-Shuttered Damper
White Finish

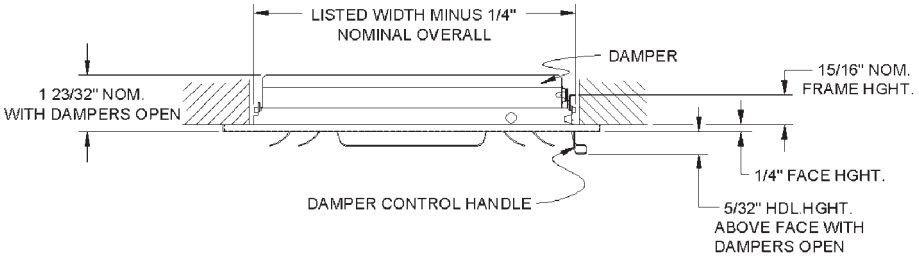

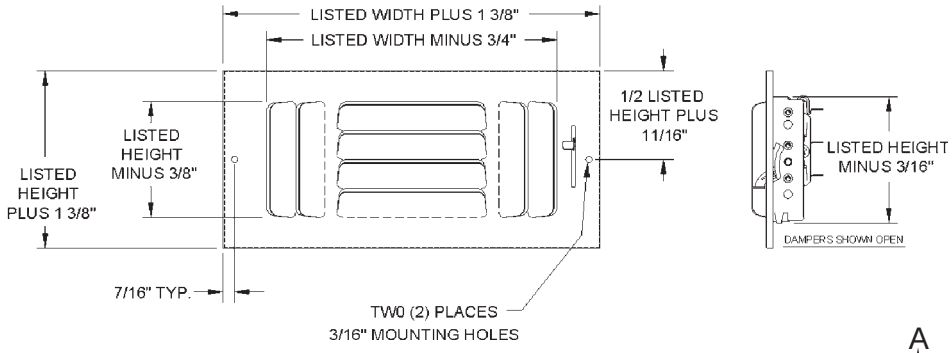

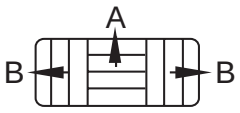

C3/AC3 SERIES CURVED BLADE SIDEWALL/CEILING REGISTERS

UNIT SIZE	OVERALL SIZE	FACE VELOCITY	300	400	500	600	700	800	900	1000
		PRESSURE LOSS	.006	.010	.016	.022	.031	.040	.050	.062
6x4	7 3/8 x 5 3/8	Cfm	16	22	28	33	39	44	50	56
Ak .056		Throw A/B	1.5/1	2/1	3/1	3/2	4/2	5/2	5/3	6/4
6x6	7 3/8 x 7 3/8	Cfm	27	36	45	54	63	72	81	90
Ak .090		Throw A/B	1.5/1	2/1	3/1	4/2	5/2	5/3	5.5/3	6/4
8x4	9 3/8 x 5 3/8	Cfm	22	30	38	45	53	60	68	76
Ak .076		Throw A/B	2/1	3/1	3/2	4/2	5/3	5.5/3	6/4	7/4
8x6	9 3/8 x 7 3/8	Cfm	37	50	62	75	87	100	112	125
Ak .125		Throw A/B	3/1	3/2	5/2	5/3	5.5/3	6/3	7/4	8/4
8x8	9 3/8 x 9 3/8	Cfm	45	61	76	91	107	122	137	153
Ak .153		Throw A/B	3/1	4/2	5/2	5/3	6/3	6/4	8/4	8/5
10x4	11 3/8 x 5 3/8	Cfm	31	41	52	62	72	83	93	104
Ak .104		Throw A/B	3/1	3/2	4/2	5/3	5.5/3	6/3	6/4	7/4
10x6	11 3/8 x 6 3/8	Cfm	48	64	80	96	112	128	144	1606
Ak .160		Throw A/B	3/1	4/2	5/2	5/3	6/3	6/4	8/4	8/5

Engineers specs continued on page 34

C3/AC3 SERIES CURVED BLADE SIDEWALL/CEILING REGISTERS (CONT'D)

UNIT SIZE	OVERALL SIZE	FACE VELOCITY	300	400	500	600	700	800	900	1000
		PRESSURE LOSS	.006	.010	.016	.022	.031	.040	.050	.062
10x8	11 3/8 x 9 3/8	Cfm	62	83	104	124	145	166	187	208
Ak .208		Throw A/B	3/2	4/2	5/3	5.5/3	6/4	7/4	8/5	9/5
10x10	11 3/8 x 11 3/8	Cfm	83	111	139	166	194	222	250	278
Ak .278		Throw A/B	3/2	5/2	5.5/3	6/3	7/4	8/5	9/6	10/6
12x4	13 3/8 x 5 3/8	Cfm	37	50	62	75	87	100	112	125
Ak .125		Throw A/B	3/1	3/2	5/2	5/3	6/3	6/4	7/4	8/4
12x6	13 3/8 x 7 3/8	Cfm	58	77	97	116	135	155	174	194
Ak .194		Throw A/B	3/2	4/2	5/2	5.5/3	6/4	7/4	8/5	9/5
12x8	13 3/8 x 9 3/8	Cfm	72	97	121	145	170	194	218	243
Ak .243		Throw A/B	3/2	5/2	5/3	6/3	7/4	8/5	9/5	10/6
12x10	13 3/8 x 11 3/8	Cfm	99	133	166	199	233	266	299	333
Ak .333		Throw A/B	4/2	5/3	6/3	7/4	8/5	9/6	11/6	11/7
12x12	13 3/8 x 13 3/8	Cfm	120	161	201	241	282	322	362	403
Ak .403		Throw A/B	4/2	5/3	6/3	7/4	8/5	10/6	11/7	12/7
14x4	15 3/8 x 5 3/8	Cfm	45	61	76	91	107	122	137	153
Ak .153		Throw A/B	3/1	4/2	5/2	5/3	6/3	6/4	8/4	8/5
14x6	15 3/8 x 7 3/8	Cfm	66	88	111	133	155	177	199	222
Ak .222		Throw A/B	3/2	4/2	5/3	5.5/3	6/4	8/4	8/5	9/6
14x8	15 3/8 x 9 3/8	Cfm	85	114	142	171	199	228	256	285
Ak .285		Throw A/B	4/2	5/2	5.5/3	6/4	8/4	8/5	9/6	11/6
14x10	15 3/8 x 11 3/8	Cfm	114	156	191	229	267	305	343	382
Ak .382		Throw A/B	4/2	5/3	6/3	8/4	9/5	10/6	11/7	12/7
14x12	15 3/8 x 12 3/8	Cfm	161	215	269	322	376	430	484	538
Ak .538		Throw A/B	5/2	5.5/3	6/4	8/5	9/6	11/6	12/7	13/8
14x14	15 3/8 x 15 3/8	Cfm	164	219	275	329	384	439	494	549
Ak .549		Throw A/B	5/2	6/3	7/4	9/5	10/6	12/6	13/8	14/9
16x4	17 3/8 x 5 3/8	Cfm	48	64	80	96	112	128	144	160
Ak .160		Throw A/B	3/1	4/2	5/2	5/3	6/3	6/4	8/4	8/5
16x6	17 3/8 x 7 3/8	Cfm	77	102	128	154	179	205	231	257
Ak .257		Throw A/B	3/2	4/2	5/3	6/3	6/4	8/4	9/5	9/6
16x8	17 3/8 x 9 3/8	Cfm	97	130	163	195	228	260	293	326
Ak .326		Throw A/B	3/2	5/2	5.5/3	6/4	8/4	9/5	9/6	11/6
16x10	17 3/8 x 11 3/8	Cfm	131	175	219	262	306	350	394	438
Ak .438		Throw A/B	4/2	5/3	6/4	8/4	9/5	10/6	11/7	12/7
16x12	17 3/8 x 13 3/8	Cfm	158	211	264	316	369	422	475	528
Ak .528		Throw A/B	5/2	5.5/3	6/4	8/5	9/6	11/6	12/7	13/8
16x14	17 3/8 x 15 3/8	Cfm	164	219	274	328	383	438	493	548
Ak .548		Throw A/B	5/2	6/3	7/4	9/5	11/6	12/6	13/8	14/9
16x16	17 3/8 x 17 3/8	Cfm	170	227	284	341	398	455	512	569
Ak .569		Throw A/B	5/3	6/4	8/4	9/6	11/7	12/8	14/9	16/9

Terminal Velocity of 75 fpm Always specify width by height

C4 CURVED BLADE SIDEWALL/ CEILING REGISTERS

Steel Construction
Curved Blades
4-Way Throw
Lanced Face
Multi-Shuttered Damper
White Finish

AC4 CURVED BLADE SIDEWALL/ CEILING REGISTERS

Aluminum Construction
Curved Blades
4-Way Throw
Lanced Face
Multi-Shuttered Damper
White Finish

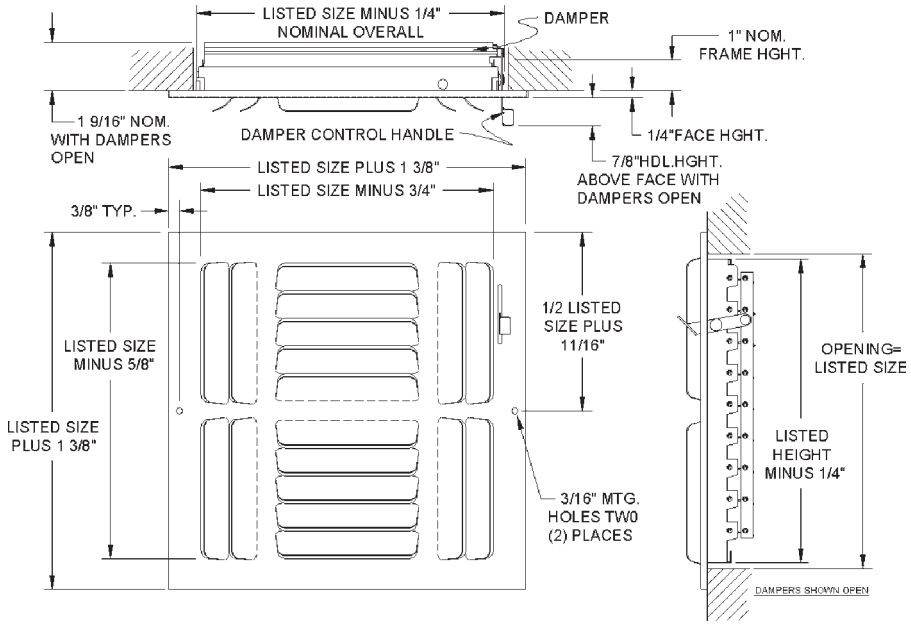

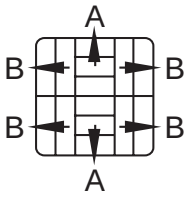

C4/AC4 SERIES CURVED BLADE SIDEWALL/CEILING REGISTERS

UNIT SIZE	OVERALL SIZE	FACE VELOCITY	300	400	500	600	700	800	900	1000
		PRESSURE LOSS	.006	.010	.016	.022	.031	.040	.050	.062
6x6	7 3/8 X 7 3/8	Cfm	27	36	45	54	63	72	81	76
Ak .090		Throw A/B	1.5/1	2/1	3/1	4/2	5/2	5/3	5.5/3	6/4
8x8	9 3/8 X 9 3/8	Cfm	46	61	77	79	92	122	138	153
Ak .153		Throw A/B	2/1	4/2	5/2	5/3	6/3	6/4	8/4	8/5
10x10	11 3/8 X 11 3/8	Cfm	80	106	132	158	185	211	238	264
Ak .264		Throw A/B	2/1	4/1	5/2	5/3	6/2	7/4	8/5	9/5
12x12	13 3/8 X 13 3/8	Cfm	115	153	191	229	267	306	344	382
Ak .382		Throw A/B	3/1	4/2	5/2	6/3	7/4	9/5	10/6	11/6
14x14	15 3/8 X 15 3/8	Cfm	158	211	264	317	370	422	475	528
Ak.528		Throw A/B	4/1	5/2	6/3	8/4	9/5	11/5	12/7	13/8
16x16	17 3/8 X 17 3/8	Cfm	194	258	323	388	452	517	581	646
Ak .646		Throw A/B	4/2	5/3	7/3	8/5	10/6	11/7	13/8	15/8

Terminal Velocity of 75 fpm Always specify width by height

E-MAIL: crc@TheRegisterPeople.com WEBSITE: www.TheRegisterPeople.com

C44 CURVED BLADE SIDEWALL/ CEILING REGISTERS

Steel Construction
Curved Blades
4-Way Throw
Lanced Face
Multi-Shuttered Damper
White Finish

AC44 CURVED BLADE SIDEWALL/ CEILING REGISTERS

Aluminum Construction
Curved Blades
4-Way Throw
Lanced Face
Multi-Shuttered Damper
White Finish

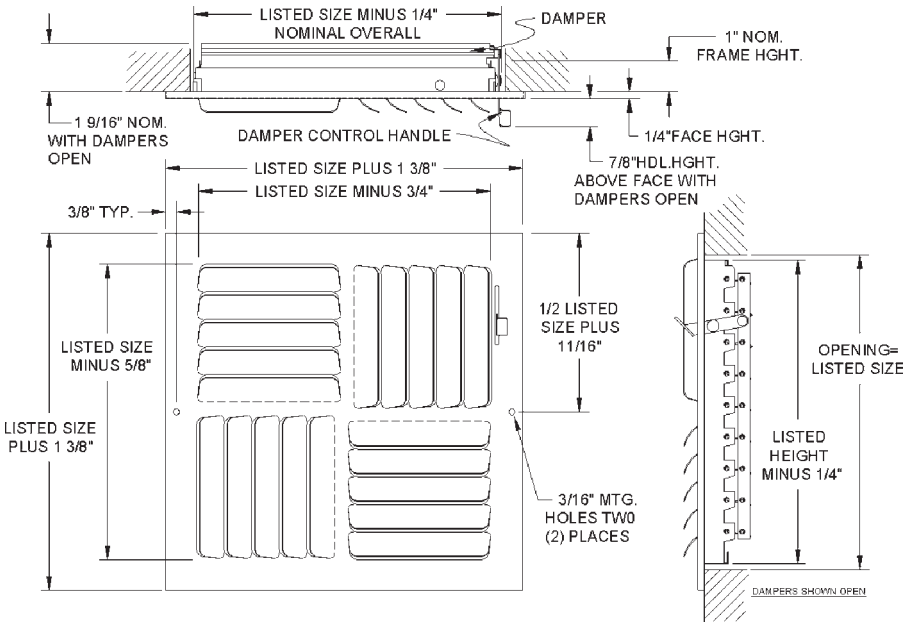

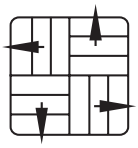

C44/AC44 SERIES CURVED BLADE SIDEWALL/CEILING REGISTERS

UNIT SIZE	OVERALL SIZE	FACE VELOCITY	300	400	500	600	700	800	900	1000
		PRESSURE LOSS	.006	.010	.016	.022	.031	.040	.050	.062
8x8	9 3/8 x 9 3/8	Cfm	48	64	80	96	112	128	144	160
Ak.160		Throw	3	4	5	6	7	8	9	10
10x10	11 3/8 x 11 3/8	Cfm	77	103	129	154	180	206	231	257
Ak .257		Throw	4	5	6	7	8	9	10	11
12x12	13 3/8 x 13 3/8	Cfm	117	156	195	233	272	311	350	389
Ak .389		Throw	5	6	7	8	9	10	11	12
14x14	15 3/8 x 15 3/8	Cfm	161	214	268	321	375	428	482	535
Ak .535		Throw	5	7	8	10	11	13	15	16

Terminal Velocity of 75 fpm Always specify width by height

16 ROUND CEILING DIFFUSERS

Steel Construction
Step Down Design
360 Degree Deflection
White Finish
Available in: 6", 8',10", 12", 14"

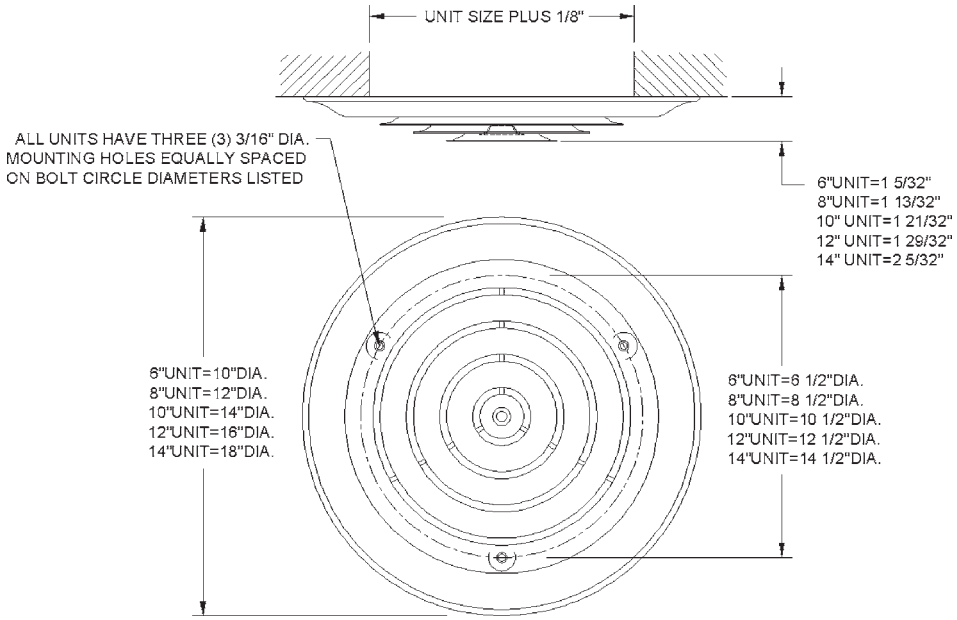

16 SERIES ROUND CEILING DIFFUSERS

UNIT SIZE	OVERALL SIZE	FACE VELOCITY PRESSURE LOSS	300 .006	400 .010	500 .016	600 .022	700 .031	800 .040	900 .050	1000 .062
6"	10" Ak .13	Cfm	39	52	65	78	91	104	117	130
		Throw	3	4	5	7	8	9	10	11
8"	12" Ak .22	Cfm	66	88	110	132	154	176	198	220
		Throw	5	6	7	9	10	12	13	15
10"	14" Ak .34	Cfm	102	136	170	204	238	272	306	340
		Throw	4	5	7	8	9	11	12	13
12"	16" Ak .49	Cfm	147	196	245	294	343	392	441	490
		Throw	5	7	8	10	12	14	15	17
14"	18" Ak .61	Cfm	183	244	305	366	427	488	549	610
		Throw	6	7	9	11	13	15	17	19

Terminal Velocity of 50 fpm

12B BUTTERFLY DAMPERS WITH DUCT RING

Steel Construction
Galvanized
Available in: 6", 8',10", 12", 14"

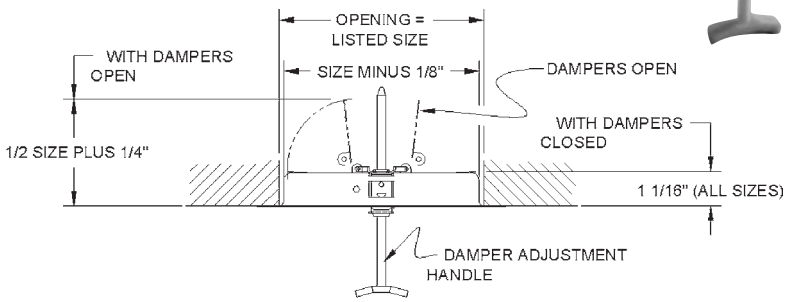

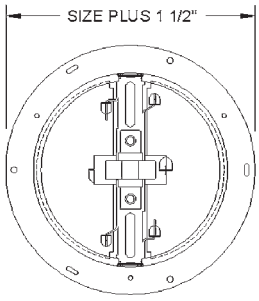

11 DUCT RINGS

Steel Construction
Allows Rapid Installation
When Damper Not Desired
Galvanized

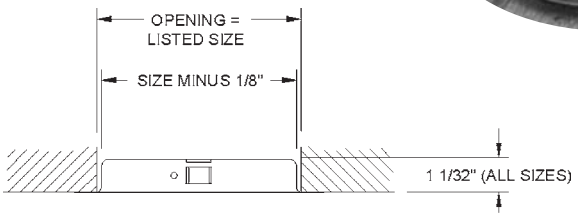

#11 SERIES AVAILABLE IN SIZES LISTED

SIZE	OVERALL SIZE
6”	7 1/2”
8”	9 1/2”
10”	11 1/2”
12”	13 1/2”
14”	15 1/2”

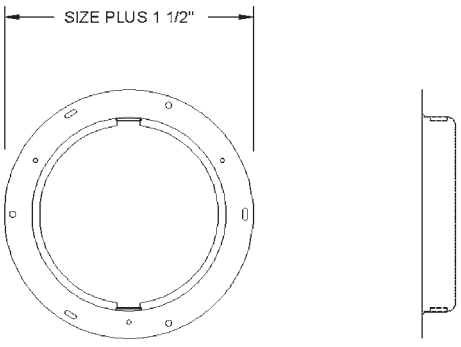

P19 SQUARE CEILING DIFFUSER

Step Down Design
Available In 2-Way,
3-Way & 4-Way Design
Use With 6"-8" Flex Duct
White Finish
Diffuser, Damper and
Outlet Assembly…All In One

4-WAY DIFFUSER
P19W08084
(AK=.33) *

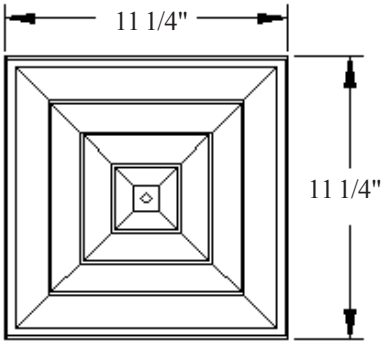

3-WAY DIFFUSER
P19W08083
(AK=.30) *

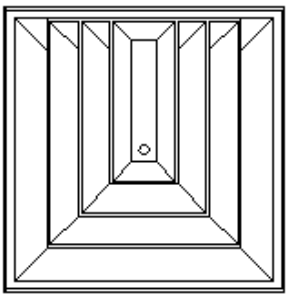

2-WAY CORNER DIFFUSER
P19W0808C
(AK=.28) *

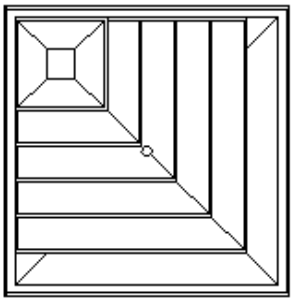

When you are looking for a product with the following features and benefits:

- Available in a two-way corner, a three-way, four-way or round 360° air throw pattern.
- All mounting screws magically disappear with a removable, snap-in, snap-out, core face.
- Molded one piece base with a square front to round 8" back for an air tight fit and maximum performance with no air leaks.
- Has an adaptable, adjustable collar with grip bars and fits 6" and 8" flex duct or pipe. Has easy tear out strip for 7".
- Flex duct attaches to the back of the diffuser with a durable flex tie strap included with the P19 and the P20.
- Low profile design with a high volume CFM performance capabilities.
- **Has a removable core that has a snap-in and snap-out design, making clean-up a breeze.**
- The P19 gives you the ability to easily change the throw pattern by simply removing the core face and changing to desired pattern.
- Has reinforced, swivel, locking clips for easy installation and to prevent stripping out.
- Has a multi-application installation method, like conventional registers with four screws.
- Foam gasket to ensure a tight, leak-free fit.
- Adaptable, adjustable collar that turns right to be removed from base …

LOOK NO FURTHER.

* Max. CFM for 7" Pipe Size = (AK .25 x Velocity)
Max. CFM for 6" Pipe Size = (AK .18 x Velocity)

Engineer's specs on page 40

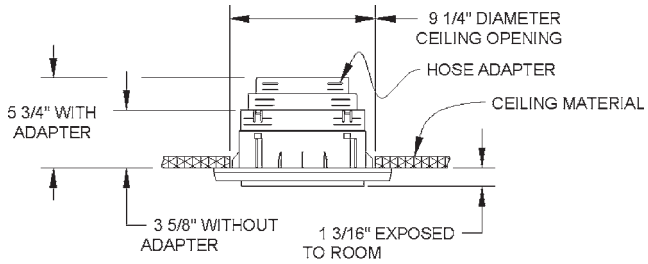

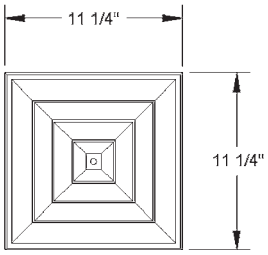

Removable Core

P19 SERIES SQUARE CEILING DIFFUSERS

UNIT SIZE/ AIR DIRECTION	COLLAR SIZE/ AK	FACE VELOCITY	300	400	500	600	700	800	900	1000
		PRESSURE LOSS	.006	.010	.016	.022	.031	.040	.050	.062
8" Square 4-Way	6" Collar-Ak .18"	Cfm	54	72	90	108	126	144	162	180
		Throw	2	2.5	3	3.5	4	4.5	5	5.5
	7" Collar-Ak .25"	Cfm	75	100	125	150	175	200	225	250
		Throw	3	4	5	6	7	8	9	10
	8" Collar-Ak .33"	Cfm	99	132	165	198	231	265	297	330
		Throw	4	5	6	7	8	9	10	11
8" Square 3-Way	6" Collar-Ak .18"	Cfm	54	72	90	108	126	144	162	180
		Throw A/B	3/1.5	4/2	5/2.5	6/3.5	8/4.5	9/5	10/6	11/6.5
	7" Collar-Ak .25"	Cfm	75	100	125	150	175	200	225	250
		Throw A/B	3.5/2	4.5/2.5	6/3	7/4	9/5	10/5.5	11/6.5	12/7
	8" Collar-Ak .30"	Cfm	90	120	150	180	210	240	270	300
		Throw A/B	4/2.5	5/3	7/4	8/4.5	10/5.5	11/6	12/7	13/7.5
8" Square 2-Way Corner	6" Collar-Ak .18"	Cfm	54	72	90	108	126	144	162	180
		Throw	2.5	3.5	4.5	5.5	6.5	7.5	8.5	9.5
	7" Collar-Ak .25"	Cfm	75	100	125	150	175	200	225	250
		Throw	3	4	6	7	8	9	10	11
	8" Collar-Ak .28"	Cfm	84	112	140	168	196	224	252	280
		Throw	4	5	7	8	9	10	11	12

Terminal Velocity of 50 fpm

Less than or equal to NC 20-30

NC 30-35

Noise Criteria Chart on page 96

P20 ROUND CEILING DIFFUSERS

Step Down Design
360 Degree Throw Pattern
Use With 6"-8" Flex Duct
White Finish
Diffuser, Damper and Outlet Assembly…All In One

Removable Core

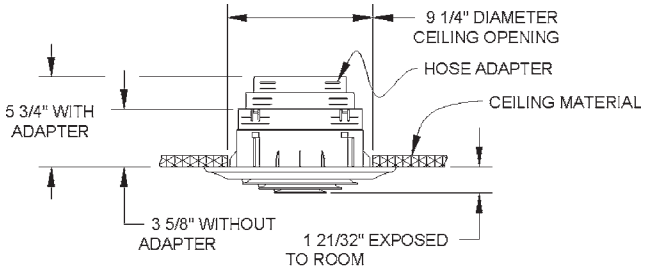

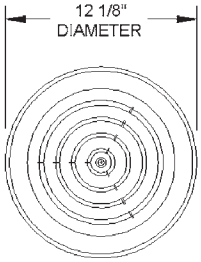

P20 SERIES ROUND CEILING DIFFUSERS

UNIT SIZE/ HOSE SIZE	FACE VELOCITY	300	400	500	600	700	800	900	1000
	PRESSURE LOSS	.006	.010	.016	.022	.031	.040	.050	.062
8" w/6" Hose	Cfm	54	72	90	108	126	144	162	180
Ak .18	Throw	3	4	5	7	8	9	10	11
8" w/7" Hose	Cfm	75	100	125	150	175	200	225	250
Ak .25	Throw	4	5	6	8	9	11	12	13
8"" w/8" Hose	Cfm	78	104	130	156	182	208	234	260
Ak .26	Throw	5	6	7	9	10	12	13	15

Terminal Velocity of 50 fpm

P19 & P20 Accessory Parts

PCF CEILING FLANGE

Galvanized

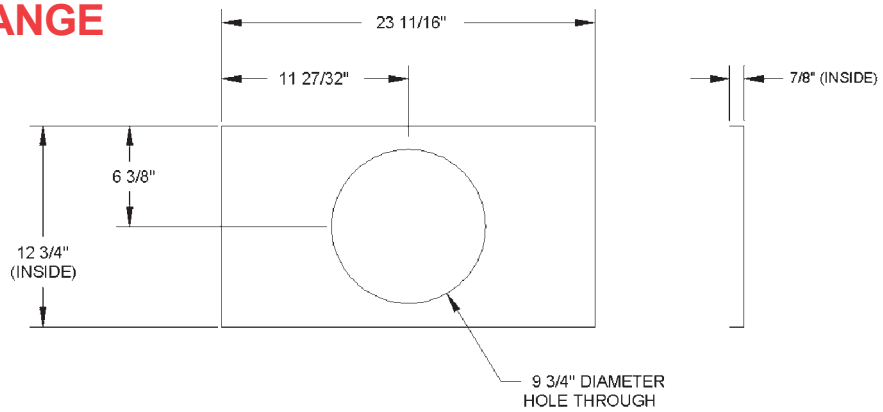

PPF
PLASTER FRAME

Galvanized

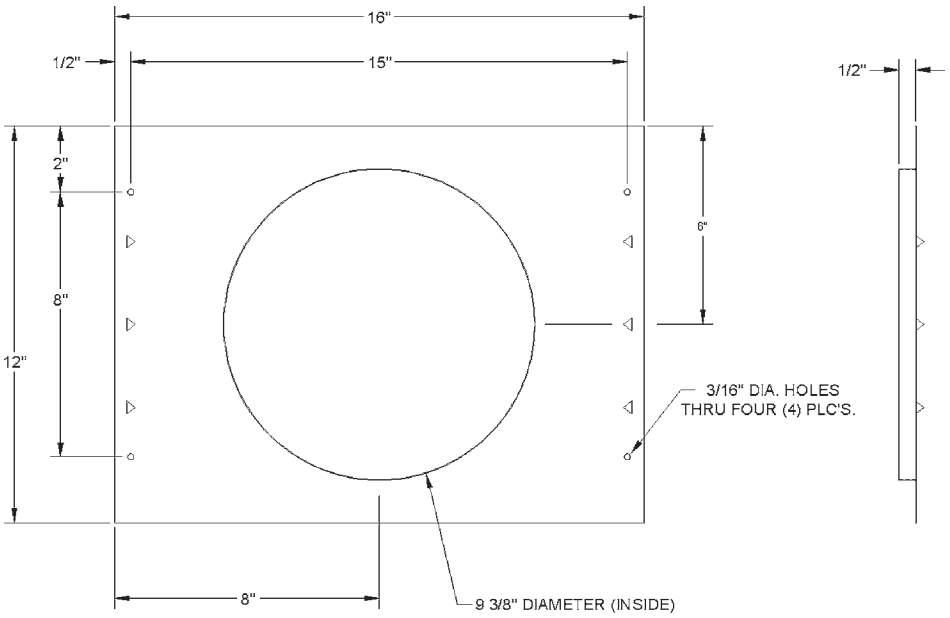

PLIP
CEILING LAY IN PANEL

White
Available In 1'x2', 2'x2' & 4'x2'

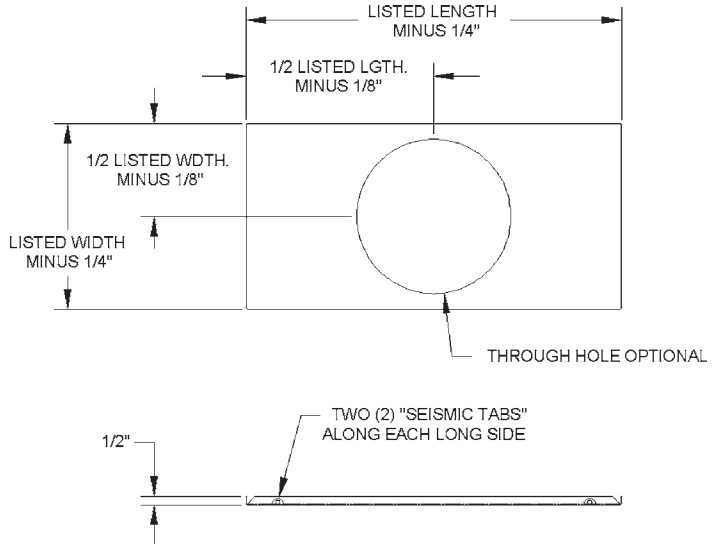

100% Made in America

G25 RETURN AIR GRILLES

Steel Construction
1/2" Spaced Fins
Lanced Face
White Finish Standard
(Available In Golden Brown)
Ceiling and Sidewall Applications
One Piece Standard Face
Heads of Mounting Screws are Painted

A25 RETURN AIR GRILLES

Aluminum Construction
1/2" Spaced Fins
Lanced Face
White Finish
Ceiling and Sidewall Applications
One Piece Standard Face
Heads of Mounting Screws
are Painted

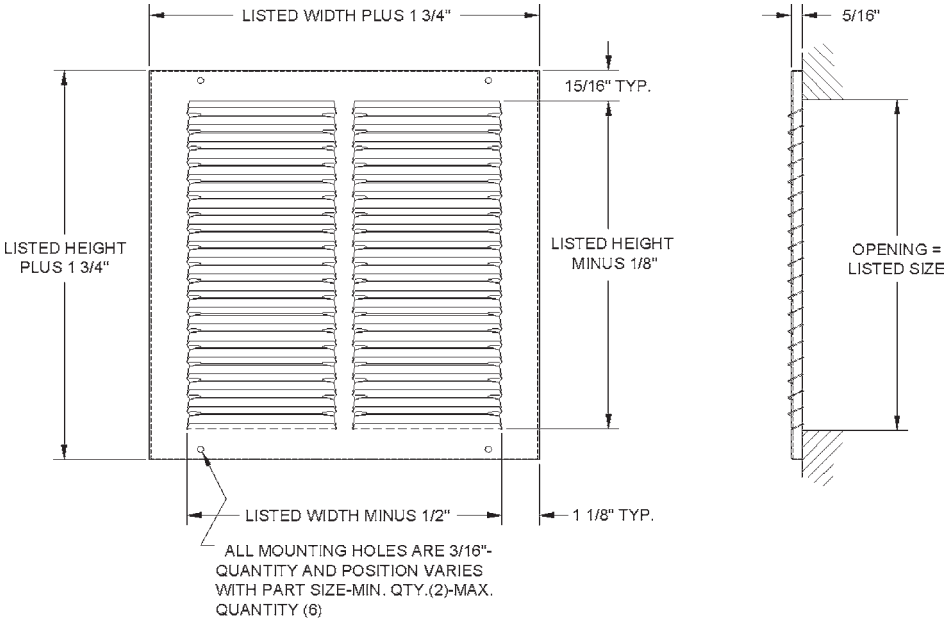

See hole position chart page 47
Engineer's specs on page 44

G25/A25 SERIES RETURN AIR GRILLES

UNIT SIZE	OVERALL SIZE	FACE VELOCITY	300	400	500	600	700
6x6	7 3/4 x 7 3/4	Cfm	58	77	96	116	135
Ak .193		Pt	.021	.038	.058	.083	.113
10x6	11 3/4 x 7 3/4	Cfm	94	126	157	189	220
Ak .315		Pt	.021	.037	.057	.081	.110
12x6	13 3/4 x 7 3/4	Cfm	116	154	193	231	270
Ak .385		Pt	.021	.037	.057	.081	.110
12x8	13 3/4 x 9 3/4	Cfm	154	205	257	308	360
Ak .514		Pt	.019	.032	.050	.074	.100
12x10	13 3/4 x 11 3/4	Cfm	193	257	321	385	449
Ak .642		Pt	.017	.031	.049	.072	.092
12x12	13 3/4 x 13 3/4	Cfm	231	308	385	462	539
Ak .770		Pt	.016	.029	.046	.066	.088
14x6	15 3/4 x 7 3/4	Cfm	137	182	228	273	319
Ak .456		Pt	.020	.034	.054	.078	.105
14x8	15 3/4 x 9 3/4	Cfm	182	243	304	365	425
Ak .608		Pt	.018	.032	.050	.073	.099
14x10	15 3/4 x 11 3/4	Cfm	228	304	380	456	532
Ak .760		Pt	.016	.029	.046	.068	.089
14x12	15 3/4 x 13 3/4	Cfm	273	365	456	547	638
Ak .912		Pt	.015	.027	.043	.062	.084
14x14	15 3/4 x 15 3/4	Cfm	319	425	532	638	744
Ak 1.063		Pt	.014	.025	.038	.055	.076
16x8	17 3/4 x 9 3/4	Cfm	211	281	351	421	491
Ak .702		Pt	.017	.031	.049	.072	.092
16x10	19 3/4 x 11 3/4	Cfm	263	351	439	526	614
Ak .877		Pt	.016	.028	.045	.065	.087
16x16	17 3/4 x 17 3/4	Cfm	421	561	702	842	982
Ak 1.403		Pt	.013	.023	.036	.053	.072
18x8	19 3/4 x 9 3/4	Cfm	231	308	385	462	539
Ak .770		Pt	.016	.029	.046	.068	.089
18x12	19 3/4 x 13 3/4	Cfm	347	462	578	693	809
Ak 1.156		Pt	.014	.025	.038	.055	.076
18x18	19 3/4 x 19 3/4	Cfm	520	693	867	1040	1214
Ak 1.734		Pt	.013	.023	.035	.051	.070
20x6	21 3/4 x 7 3/4	Cfm	189	252	315	378	441
Ak .629		Pt	.018	.032	.050	.073	.099
20x12	21 3/4 x 13 3/4	Cfm	378	504	629	765	881
Ak 1.259		Pt	.014	.024	.037	.054	.075
20x14	21 3/4 x 15 3/4	Cfm	441	587	734	881	1028
Ak 1.469		Pt	.013	.023	.036	.052	.071
20x20	21 3/4 x 21 3/4	Cfm	629	839	1049	1259	1469
Ak 2.098		Pt	.011	.019	.031	.045	.060
24x6	25 3/4 x 7 3/4	Cfm	231	308	385	462	539
Ak .770		Pt	.017	.030	.047	.067	.090
24x10	25 3/4 x 11 3/4	Cfm	385	514	642	770	899
Ak 1.284		Pt	.013	.023	.036	.053	.072
24x12	25 3/4 x 13 3/4	Cfm	462	616	770	925	1079
Ak 1.541		Pt	.013	.023	.036	.052	.070
24x14	25 3/4 x 15 3/4	Cfm	539	719	899	1079	1258
Ak 1.798		Pt	.012	.022	.034	.049	.063
24x24	25 3/4 x 25 3/4	Cfm	925	1233	1541	1849	2157
Ak 3.082		Pt	.009	.016	.025	.037	.050
30x6	31 3/4 x 7 3/4	Cfm	283	378	472	566	661
Ak .944		Pt	.015	.027	.043	.062	.084
30x8	31 3/4 x 9 3/4	Cfm	378	504	629	755	881
Ak 1.259		Pt	.014	.024	.037	.054	.075
30x10	31 3/4 x 11 3/4	Cfm	472	629	787	944	1102
Ak 1.574		Pt	.014	.023	.036	.052	.070
30x12	31 3/4 x 13 3/4	Cfm	566	755	944	1133	1322
Ak 1.888		Pt	.012	.021	.033	.048	.062
30x14	31 3/4 x 15 3/4	Cfm	661	881	1102	1322	1542
Ak 2.203		Pt	.011	.019	.031	.044	.059
30x18	31 3/4 x 19 3/4	Cfm	850	1133	1416	1699	1983
Ak 2.832		Pt	.010	.017	.030	.039	.053
30x20	31 3/4 x 21 3/4	Cfm	944	1259	1574	1888	2203
Ak 3.147		Pt	.009	.016	.025	.036	.050
30x24	31 3/4 x 25 3/4	Cfm	1133	1511	1888	2266	2644
Ak 3.777		Pt	.008	.015	.023	.032	.044

Always specify width by height

G35 RETURN AIR GRILLES

Steel Construction
1/3" Spaced Fins
Lanced Face
Ceiling and Sidewall Applications
One Piece Stamped Face
Heads of Mounting Screws are Painted
White Finish Standard
Available In Golden Brown

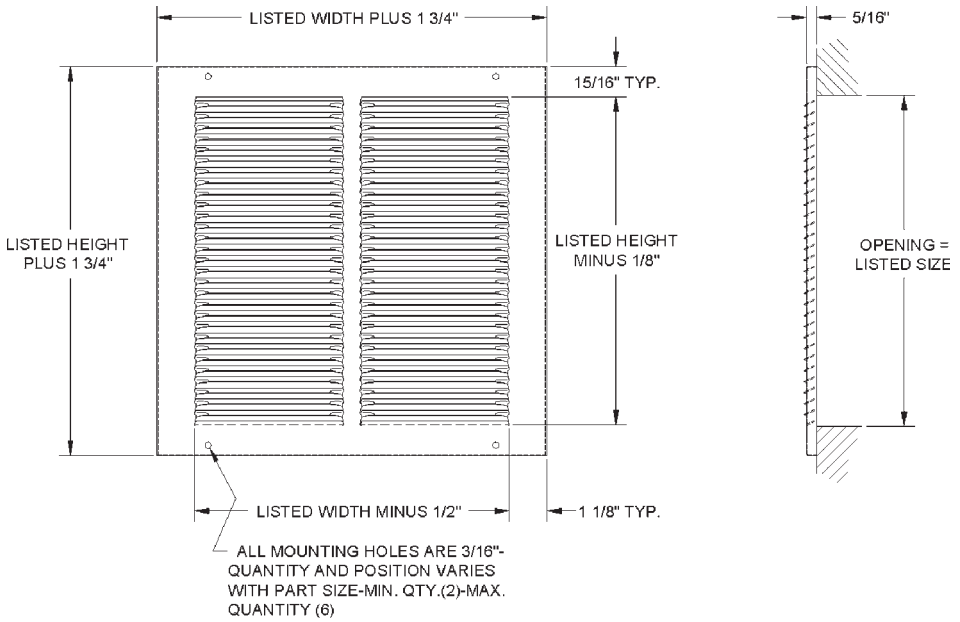

G35 SERIES RETURN AIR GRILLES

UNIT SIZE	OVERALL SIZE	FACE VELOCITY	300	400	500	600	700
10x6	11 3/4 x 7 3/4	CFM	95	126	158	189	221
Ak 0.315		Pt	0.013	0.023	0.037	0.052	0.072
10x8	11 3/4 x 9 3/4	CFM	126	168	210	252	295
Ak 0.421		Pt	0.012	0.022	0.035	0.050	0.068
10x10	11 3/4 x 11 3/4	CFM	158	210	263	316	368
Ak 0.526		Pt	0.012	0.021	0.034	0.048	0.066
12x6	13 3/4 x 7 3/4	CFM	116	155	193	232	270
Ak 0.386		Pt	0.013	0.022	0.035	0.051	0.070
12x8	13 3/4 x 9 3/4	CFM	155	206	258	309	361
Ak 0.515		Pt	0.012	0.022	0.034	0.049	0.066
12x10	13 3/4 x 11 3/4	CFM	193	258	322	386	451
Ak 0.644		Pt	0.012	0.021	0.033	0.047	0.064
12x12	13 3/4 x 13 3/4	CFM	232	309	386	464	541
Ak 0.773		Pt	0.011	0.020	0.032	0.045	0.062
14x6	15 3/4 x 7 3/4	CFM	137	183	229	274	320
Ak 0.457		Pt	0.012	0.022	0.035	0.050	0.068

Engineer's specs continued on page 46
See hole position chart page 47

G35 SERIES RETURN AIR GRILLES (CONT'D)

UNIT SIZE	OVERALL SIZE	FACE VELOCITY	300	400	500	600	700
14x8	15 3/4 x 9 3/4	CFM	183	244	305	366	427
Ak 0.609		Pt	0.012	0.021	0.033	0.047	0.065
14x10	15 3/4 x 11 3/4	CFM	229	305	381	457	533
Ak 0.762		Pt	0.011	0.020	0.032	0.045	0.062
14x12	15 3/4 x 13 3/4	CFM	274	366	457	548	640
Ak 0.914		Pt	0.011	0.020	0.031	0.045	0.060
14x14	15 3/4 x 15 3/4	CFM	320	427	533	640	747
Ak 1.066		Pt	0.011	0.019	0.030	0.043	0.059
16x8	17 3/4 x 9 3/4	CFM	211	281	352	422	493
Ak 0.704		Pt	0.012	0.021	0.033	0.046	0.063
16x10	17 3/4 x 11 3/4	CFM	264	352	440	528	616
Ak 0.880		Pt	0.011	0.020	0.031	0.045	0.061
16x16	17 3/4 x 17 3/4	CFM	422	563	704	844	985
Ak 1.407		Pt	0.010	0.018	0.029	0.042	0.057
18x6	19 3/4 x 7 3/4	CFM	174	232	290	348	406
Ak 0.579		Pt	0.012	0.021	0.034	0.048	0.065
18x8	19 3/4 x 9 3/4	CFM	232	309	386	464	541
Ak 0.773		Pt	0.011	0.020	0.032	0.045	0.062
18x10	19 3/4 x 11 3/4	CFM	290	386	483	579	676
Ak 0.966		Pt	0.011	0.020	0.031	0.044	0.060
18x18	19 3/4 x 19 3/4	CFM	522	695	869	1043	1217
Ak 1.738		Pt	0.010	0.018	0.027	0.040	0.055
20x6	21 3/4 x 7 3/4	CFM	189	252	316	379	442
Ak 0.631		Pt	0.012	0.021	0.033	0.047	0.064
20x10	21 3/4 x 11 3/4	CFM	316	421	526	631	736
Ak 1.052		Pt	0.011	0.019	0.030	0.043	0.059
20x12	21 3/4 x 13 3/4	CFM	379	505	631	757	884
Ak 1.262		Pt	0.011	0.019	0.030	0.042	0.057
20x14	21 3/4 x 15 3/4	CFM	442	589	736	884	1031
Ak 1.473		Pt	0.010	0.018	0.029	0.041	0.056
20x20	21 3/4 x 21 3/4	CFM	631	842	1052	1262	1473
Ak 2.104		Pt	0.010	0.017	0.028	0.039	0.053
24x6	25 3/4 x 7 3/4	CFM	232	309	386	464	541
Ak 0.773		Pt	0.011	0.020	0.032	0.045	0.062
24x10	25 3/4 x 11 3/4	CFM	386	515	644	773	901
Ak 1.288		Pt	0.011	0.019	0.030	0.042	0.057
24x12	25 3/4 x 13 3/4	CFM	464	618	773	927	1082
Ak 1.545		Pt	0.010	0.018	0.029	0.041	0.056
24x14	25 3/4 x 15 3/4	CFM	541	721	901	1082	1262
Ak 1.803		Pt	0.010	0.018	0.028	0.040	0.055
24x24	25 3/4 x 25 3/4	CFM	927	1236	1545	1854	2163
Ak 3.091		Pt	0.009	0.016	0.026	0.037	0.050
30x6	31 3/4 x 7 3/4	CFM	284	379	473	568	663
Ak 0.947		Pt	0.011	0.020	0.031	0.044	0.060
30x8	31 3/4 x 9 3/4	CFM	379	505	631	757	884
Ak 1.262		Pt	0.011	0.019	0.030	0.042	0.057
30x10	31 3/4 x 11 3/4	CFM	473	631	789	947	1105
Ak 1.578		Pt	0.010	0.018	0.029	0.041	0.055
30x12	31 3/4 x 13 3/4	CFM	568	757	947	1136	1325
Ak 1.894		Pt	0.009	0.016	0.026	0.037	0.050
30x14	31 3/4 x 15 3/4	CFM	663	884	1105	1325	1546
Ak 2.209		Pt	0.010	0.017	0.027	0.039	0.052
30x18	31 3/4 x 19 3/4	CFM	852	1136	1420	1704	1988
Ak 2.840		Pt	0.009	0.017	0.026	0.038	0.050
30x20	31 3/4 x 21 3/4	CFM	947	1262	1578	1894	2209
Ak 3.156		Pt	0.009	0.016	0.026	0.037	0.050
30x24	31 3/4 x 25 3/4	CFM	1136	1515	1894	2272	2651
Ak 3.787		Pt	0.009	0.016	0.025	0.036	0.480

Always specify width by height

HOLE POSITION CHART FOR ITEMS G25, A25 SERIES & G35 SERIES

SCREW HOLE LOCATION CHART
G25, A25, & G35 SERIES GRILLES

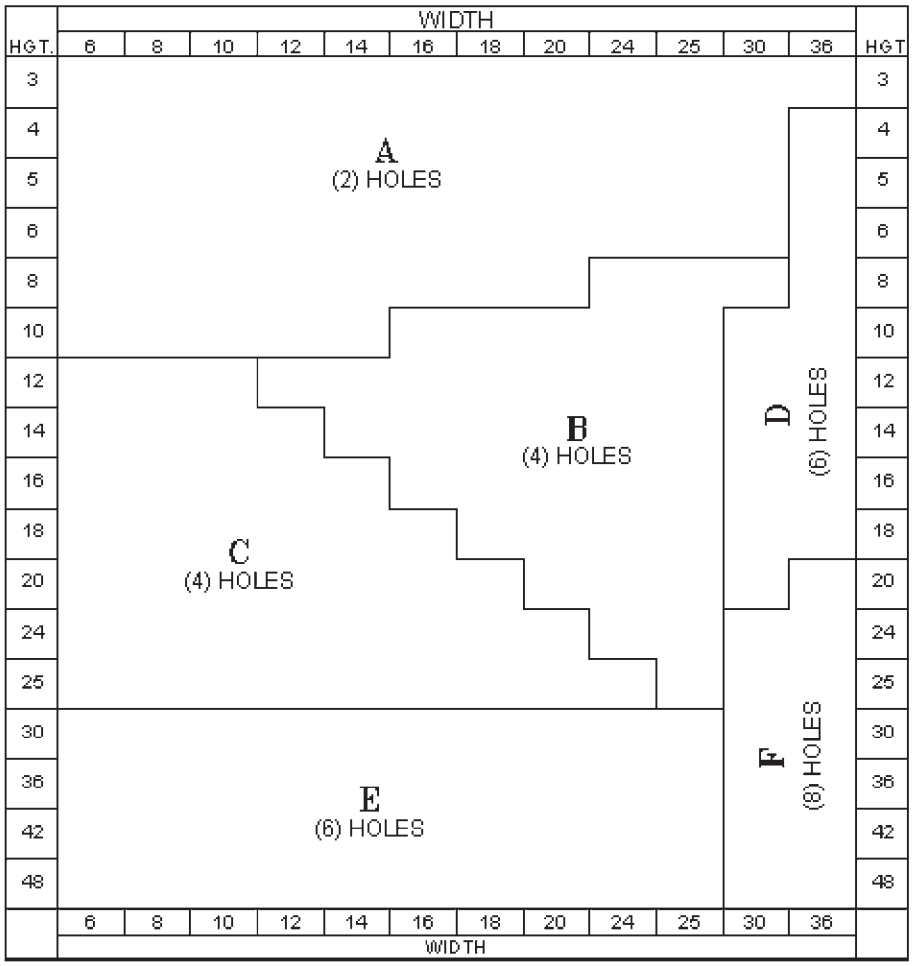

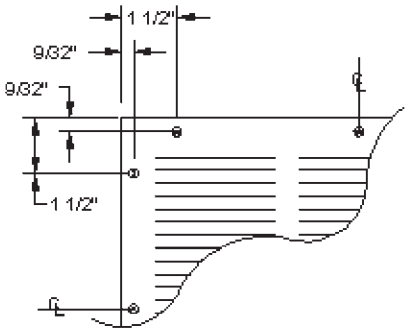

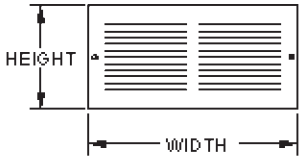

Always specify width x height

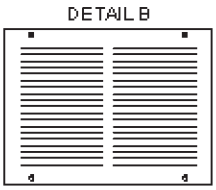

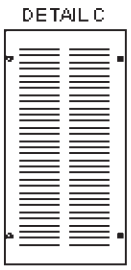

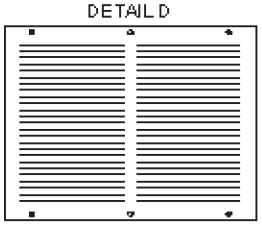

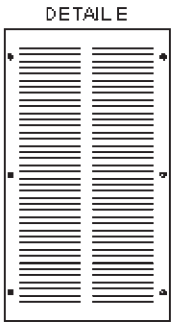

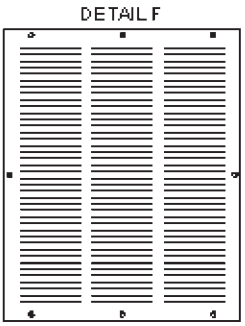

FG2 FILTER GRILLES

Steel Construction
1/2” Spaced Fins
Lanced Face
Uses Standard 1" Filter (Not Included)
Removable Hinged Face for Easy Installation and Cleaning
With Filter Retainer
Thumb Latch For Easy Opening
White Finish

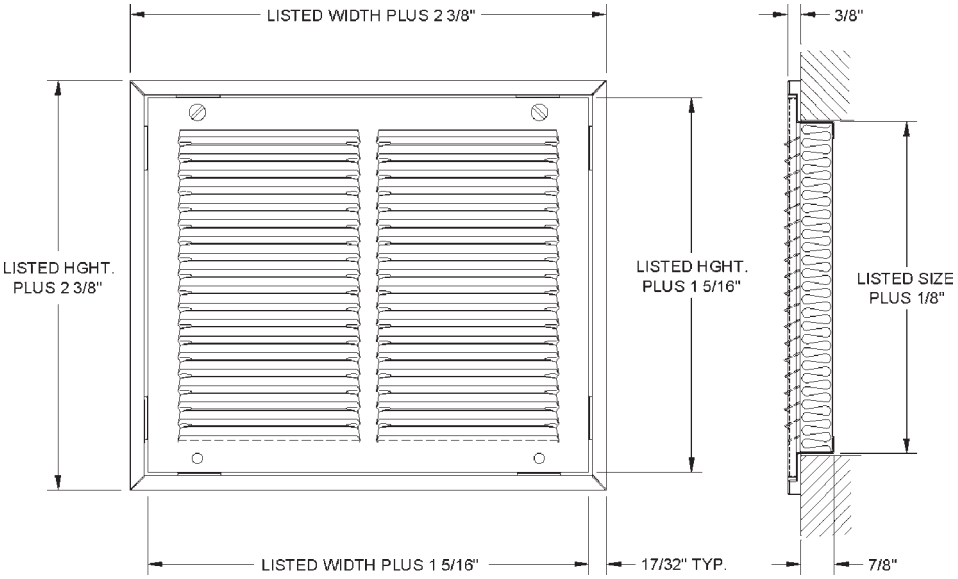

FG2 SERIES FILTER GRILLES

UNIT SIZE	OVERALL SIZE	FACE VELOCITY	300	400	500	600	700
12x12	14 3/8 x 14 3/8	Cfm	222	295	369	443	517
Ak .738		Pt	.016	.029	.046	.066	.088
14x14	16 3/8 x 16 3/8	Cfm	308	410	513	615	718
Ak 1.025		Pt	.014	.025	.038	.055	.076
16x16	18 3/8 x 18 3/8	Cfm	408	544	680	816	952
Ak 1.360		Pt	.013	.023	.036	.053	.072
18x12	20 3/8 x 14 3/8	Cfm	332	443	554	665	775
Ak 1.108		Pt	.014	.025	.038	.055	.076
18x18	20 3/8 x 20 3/8	Cfm	506	674	843	1011	1180
Ak 1.685		Pt	.013	.023	.035	.051	.070
20x12	22 3/8 x 14 3/8	Cfm	362	483	603	724	844
Ak 1.206		Pt	.014	.024	.037	.054	.075

Engineer's specs continued on page 49

FG2 SERIES FILTER GRILLES (CONT'D)

UNIT SIZE	OVERALL SIZE	FACE VELOCITY	300	400	500	600	700
20x14	22 3/8 x 16 3/8	Cfm	425	566	708	850	991
Ak 1.416		Pt	.013	.023	.036	.052	.071
20x20	22 3/8 x 22 3/8	Cfm	614	818	1023	1227	1432
Ak 2.046		Pt	.011	.019	.031	.045	.060
24x12	26 3/8 x 14 3/8	Cfm	443	591	738	886	1034
Ak 1.477		Pt	.013	.023	.036	.052	.070
24x14	26 3/8 x 16 3/8	Cfm	520	693	867	1040	1214
Ak 1.734		Pt	.012	.022	.034	.049	.063
24x24	26 3/8 x 26 3/8	Cfm	905	1207	1509	1811	2112
Ak 3.018		Pt	.009	.016	.025	.037	.050
30x10	32 3/8 x 12 3/8	Cfm	448	598	747	897	1046
Ak 1.495		Pt	.014	.023	.036	.052	.070
30x12	32 3/8 x 14 3/8	Cfm	543	724	905	1086	1267
Ak 1.810		Pt	.012	.021	.033	.048	.062
30x14	32 3/8 x 16 3/8	Cfm	637	850	1062	1275	1487
A 2.124		Pt	.011	.019	.031	.044	.059
30x20	32 3/8 x 22 3/8	Cfm	1393	1857	2321	2785	3249
Ak 3.068		Pt	.009	.016	.025	.036	.050
30x24	32 3/8 x 26 3/8	Cfm	1109	1479	1849	2219	2589
Ak 3.698		Pt	.008	.015	.023	.032	.044

Always specify width by height

FG3 FILTER GRILLES

Steel Construction
1/3" Spaced Fins
Lanced Face
Uses Standard 1" Filter (Not Included)
Removable, Hinged Face for Easy Installation and Cleaning
With Filter Retainer
Thumb Latch For Easy Opening
White Finish

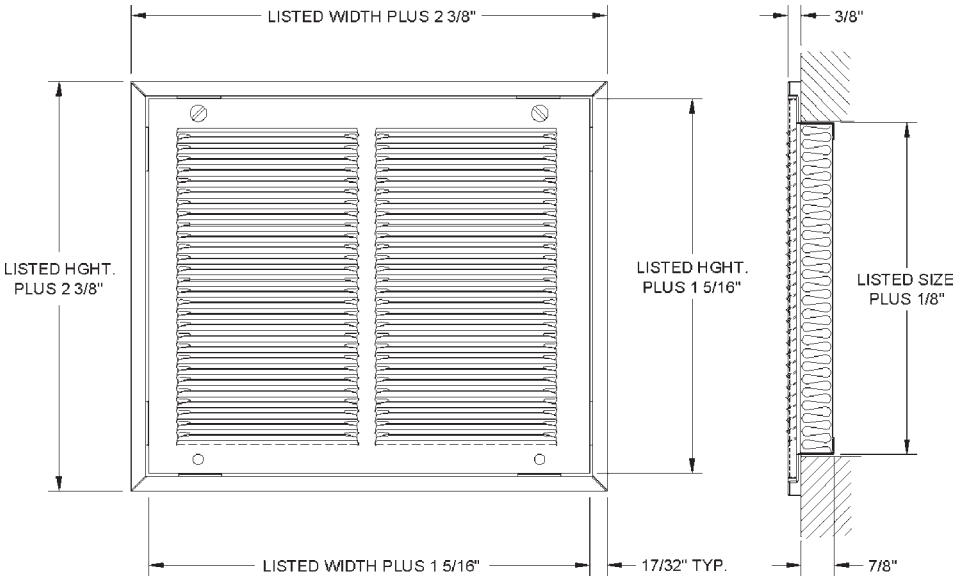

Engineer's specs on page 50

FG3 SERIES FILTER GRILLES

UNIT SIZE	OVERALL SIZE	FACE VELOCITY	300	400	500	600	700
12x12	14 3/8 x 14 3/8	CFM	225	300	376	451	526
Ak 0.751		Pt	0.011	0.020	0.032	0.045	0.062
14x14	16 3/8 x 16 3/8	CFM	312	416	521	625	729
Ak 1.041		Pt	0.011	0.019	0.030	0.043	0.059
16x16	18 3/8 x 18 3/8	CFM	413	551	689	827	965
Ak 1.378		Pt	0.010	0.018	0.029	0.042	0.057
18x12	20 3/8 x 14 3/8	CFM	338	451	563	676	789
Ak 1.127		Pt	0.011	0.019	0.030	0.043	0.059
18x18	20 3/8 x 20 3/8	CFM	512	682	853	1024	1194
Ak 1.706		Pt	0.010	0.018	0.027	0.040	0.055
20x10	22 3/8 x 12 3/8	CFM	305	407	508	610	712
Ak 1.017		Pt	0.011	0.019	0.030	0.043	0.059
20x12	22 3/8 x 14 3/8	CFM	368	491	614	736	859
Ak 1.227		Pt	0.011	0.019	0.030	0.042	0.057
20x14	22 3/8 x 16 3/8	CFM	431	575	719	863	1006
Ak 1.438		Pt	0.010	0.019	0.029	0.041	0.056
20x16	22 3/8 x 18 3/8	CFM	494	659	824	989	1154
Ak 1.648		Pt	0.010	0.018	0.029	0.040	0.056
20x20	22 3/8 x 22 3/8	CFM	621	828	1034	1241	1448
Ak 2.069		Pt	0.010	0.017	0.028	0.039	0.053
24x12	26 3/8 x 14 3/8	CFM	451	601	751	901	1052
Ak 1.502		Pt	0.010	0.018	0.029	0.041	0.056
24x14	26 3/8 x 16 3/8	CFM	528	704	880	1056	1232
Ak 1.760		Pt	0.010	0.018	0.028	0.040	0.055
24x18	26 3/8 x 20 3/8	CFM	682	910	1137	1365	1592
Ak 2.275		Pt	0.010	0.017	0.027	0.039	0.052
24x20	26 3/8 x 22 3/8	CFM	760	1013	1266	1520	1773
Ak 2.533		Pt	0.009	0.017	0.027	0.038	0.052
24x24	26 3/8 x 26 3/8	CFM	914	1219	1524	1829	2133
Ak 3.048		Pt	0.009	0.016	0.026	0.037	0.050
25x14	27 3/8 x 16 3/8	CFM	539	719	899	1078	1258
Ak 1.797		Pt	0.010	0.018	0.029	0.040	0.055
25x16	27 3/8 x 18 3/8	CFM	618	824	1030	1236	1442
Ak 2.060		Pt	0.010	0.017	0.028	0.039	0.054
25x20	27 3/8 x 22 3/8	CFM	776	1034	1293	1552	1810
Ak 2.586		Pt	0.009	0.017	0.027	0.038	0.052
25x25	27 3/8 x 27 3/8	CFM	973	1297	1622	1946	2270
Ak 3.244		Pt	0.009	0.016	0.026	0.036	0.050
30x10	32 3/8 x 12 3/8	CFM	458	610	763	915	1068
Ak 1.525		Pt	0.010	0.018	0.029	0.041	0.055
30x12	32 3/8 x 14 3/8	CFM	552	736	920	1105	1289
Ak 1.841		Pt	0.010	0.018	0.028	0.040	0.054
30x14	32 3/8 x 16 3/8	CFM	647	863	1078	1294	1510
Ak 2.157		Pt	0.010	0.017	0.027	0.039	0.052
30x20	32 3/8 x 22 3/8	CFM	931	1241	1552	1862	2172
Ak 3.103		Pt	0.009	0.016	0.026	0.037	0.050
30x24	32 3/8 x 26 3/8	CFM	1120	1494	1867	2241	2614
Ak 3.734		Pt	0.009	0.016	0.025	0.036	0.048
30x30	32 3/8 x 32 3/8	CFM	1404	1872	2341	2809	3277
Ak 4.681		Pt	0.007	0.015	0.025	0.034	0.048

Always specify width by height

Section II

Commercial Steel/Aluminum

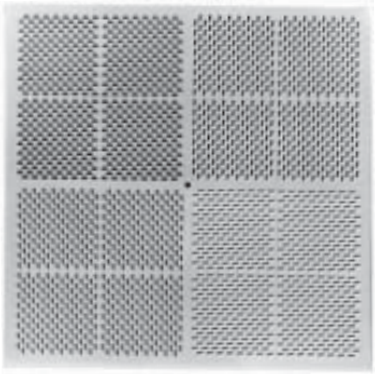

SURFLO™
By Continental

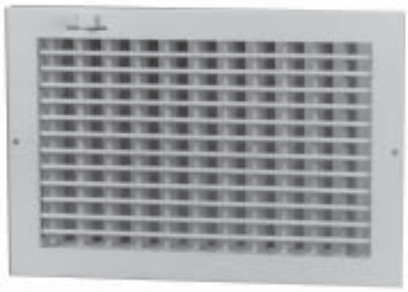

RVML COMMERCIAL SIDEWALL/CEILING SUPPLY DIFFUSERS (Vertical)

Sidewall/Ceiling
Single Deflection-Steel Frame
Multi-Shutter Damper
Adjustable Steel Rollform Vertical Face Blades
White Finish

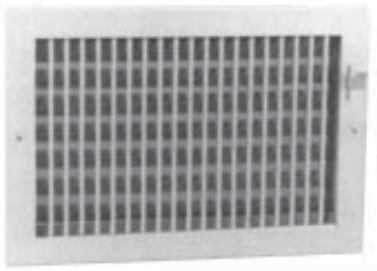

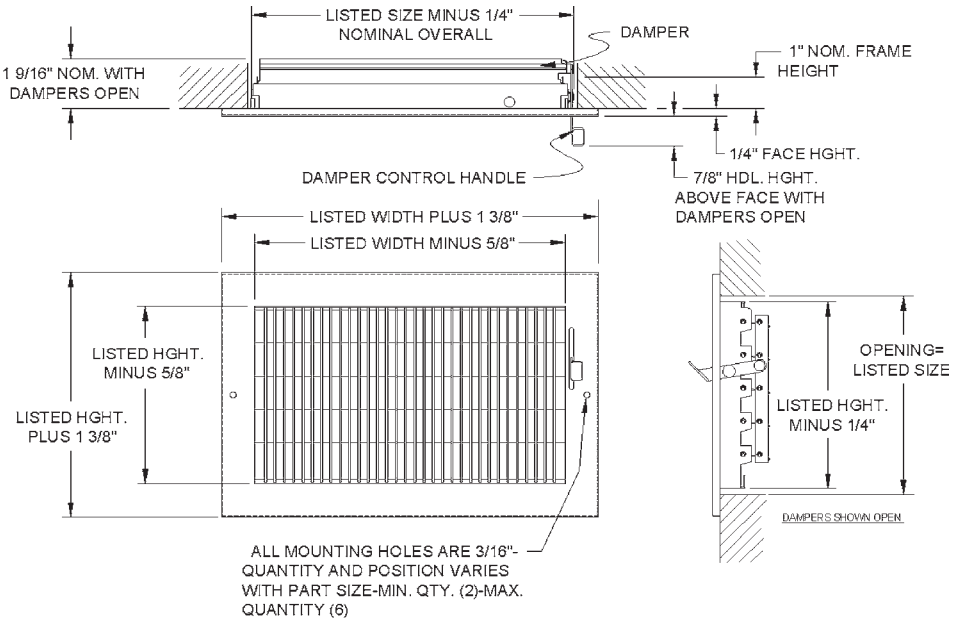

RVML SERIES COMMERCIAL SIDEWALL/CEILING SUPPLY DIFFUSERS

UNIT SIZE	OVERALL SIZE	FACE VELOCITY	300	400	500	600	700	800	900	1000
		PRESSURE LOSS	.006	.010	.016	.022	.031	.040	.050	.062
6x4	7 3/8 x 5 3/8	Cfm	27	36	45	54	63	72	81	90
Ak .090		Throw	3	4	5	7	8	9	10	11
6x6	7 3/8 x 7 3/8	Cfm	42	56	69	83	97	111	125	139
Ak .139		Throw	5	6	7	9	10	12	13	15
8x4	9 3/8 x 5 3/8	Cfm	35	47	59	71	83	94	106	118
Ak .118		Throw	4	5	7	8	9	11	12	13
8x6	9 3/8 x 7 3/8	Cfm	56	75	94	113	131	150	169	188
Ak .188		Throw	5	7	8	10	12	14	15	17
8x8	9 3/8 x 9 3/8	Cfm	77	103	128	154	180	206	231	257
Ak .257		Throw	6	7	9	11	13	15	17	19
10x4	11 3/8 x 5 3/8	Cfm	44	58	73	88	102	117	131	146
Ak .146		Throw	5	6	8	9	11	12	13	14
10x5	11 3/8 x 5 3/8	Cfm	58	78	97	117	136	156	175	194
Ak .194		Throw	5	7	8	10	12	13	15	16
10x6	11 3/8 x 7 3/8	Cfm	71	94	118	142	165	189	213	236
Ak 236		Throw	6	8	9	11	13	15	17	19
10x8	11 3/8 x 9 3/8	Cfm	98	131	163	196	228	261	294	326
Ak .326		Throw	7	8	10	12	14	16	17	21
10x10	11 3/8 x 11 3/8	Cfm	125	167	208	250	292	333	375	417
Ak .417		Throw	7	9	12	14	16	18	20	23

Engineer's specs continued on page 53

RVML SERIES COMMERCIAL SIDEWALL/CEILING SUPPLY DIFFUSERS (CONT'D)

UNIT SIZE	OVERALL SIZE	FACE VELOCITY	300	400	500	600	700	800	900	1000
		PRESSURE LOSS	.006	.010	.016	.022	.031	.040	.050	.062
12x4	13 3/8 x 5 3/8	Cfm	54	72	90	108	126	144	163	181
Ak .181		Throw	5	7	8	10	12	14	15	17
12x5	13 3/8 x 6 3/8	Cfm	69	92	115	138	160	183	206	229
Ak .229		Throw	6	7	9	11	13	15	17	19
12x6	13 3/8 x 7 3/8	Cfm	85	114	142	171	199	228	256	285
Ak .285		Throw	7	8	10	12	15	17	19	21
12x8	13 3/8 x 9 3/8	Cfm	117	156	194	233	272	311	350	389
Ak .389		Throw	7	9	11	13	18	17	19	22
12x10	13 3/8 x 11 3/8	Cfm	150	200	250	300	350	400	450	500
Ak .500		Throw	8	11	13	16	19	22	25	28
12x12	13 3/8 x 13 3/8	Cfm	183	244	306	367	428	489	550	611
Ak .611		Throw	9	11	14	17	20	22	25	29
14x4	15 3/8 x 5 3/8	Cfm	63	83	104	125	146	167	188	208
Ak .208		Throw	5	7	9	11	13	15	17	18
14x6	15 3/8 x 7 3/8	Cfm	94	125	156	188	219	250	281	313
Ak .313		Throw	7	8	11	13	16	18	20	23
14x8	15 3/8 x 9 3/8	Cfm	138	183	229	275	321	367	413	458
Ak .458		Throw	8	9	12	14	17	19	21	24
14x10	15 3/8 x 11 3/8	Cfm	175	233	292	350	408	467	525	583
Ak .583		Throw	9	11	13	16	19	22	25	28
14x12	15 3/8 x 13 3/8	Cfm	215	286	358	429	501	572	644	715
Ak .715		Throw	9	12	14	18	22	24	27	31
14x14	15 3/8 x 15 3/8	Cfm	252	336	420	504	588	672	756	840
Ak .840		Throw	9	15	19	23	27	31	34	38
16x4	17 3/8 x 5 3/8	Cfm	69	92	115	138	160	183	206	229
Ak .229		Throw	7	10	12	15	17	20	22	25
16x6	17 3/8 x 7 3/8	Cfm	110	147	184	221	258	294	331	368
Ak .368		Throw	7	10	12	15	17	20	22	25
16x8	17 3/8 x 9 3/8	Cfm	150	200	250	300	350	400	450	500
Ak .500		Throw	8	10	13	15	18	20	22	25
16x10	17 3/8 x 11 3/8	Cfm	192	256	319	383	447	511	575	639
Ak .639		Throw	7	10	12	15	17	20	22	25
16x12	17 3/8 x 13 3/8	Cfm	233	311	389	467	544	622	700	778
Ak .778		Throw	7	10	12	15	17	20	22	25
16x16	17 3/8 x 17 3/8	Cfm	296	394	493	592	690	789	888	986
Ak .986		Throw	12	15	20	23	28	31	33	39
18x4	19 3/8 x 5 3/8	Cfm	77	103	128	154	180	206	231	257
Ak .257		Throw	7	10	12	15	17	20	22	25
18x6	19 3/8 x 7 3/8	Cfm	125	167	208	250	292	333	375	417
Ak .417		Throw	8	11	13	16	19	22	24	27
18x8	19 3/8 x 9 3/8	Cfm	171	228	285	342	399	456	513	569
Ak .569		Throw	9	11	13	16	19	22	25	28
18x10	19 3/8 x 11 3/8	Cfm	217	289	361	433	506	578	650	722
Ak .722		Throw	7	10	12	15	17	20	22	25
18x12	19 3/8 x 13 3/8	Cfm	265	353	441	529	617	706	794	882
Ak .882		Throw	7	10	12	15	17	20	22	25
18x16	19 3/8 x 17 3/8	Cfm	333	444	556	667	778	889	1000	1111
Ak 1.111		Throw	7	10	12	15	17	20	22	25
18x18	19 3/8 x 19 3/8	Cfm	381	508	635	763	890	1017	1144	1271
Ak 1.271		Throw	7	10	12	15	17	20	22	25
20x4	21 3/8 x 5 3/8	Cfm	88	117	146	175	204	233	263	292
Ak .292		Throw	7	10	12	15	17	20	22	25
20x6	21 3/8 x 7 3/8	Cfm	140	186	233	279	326	372	419	465
Ak .465		Throw	8	11	14	16	20	23	25	28
20x8	21 3/8 x 9 3/8	Cfm	192	256	319	383	447	511	575	639
Ak .639		Throw	9	12	15	18	21	23	26	29
20x10	21 3/8 x 11 3/8	Cfm	244	325	406	488	569	650	731	813
Ak .813		Throw	7	10	12	15	17	20	22	25
20x12	21 3/8 x 13 3/8	Cfm	296	394	493	592	690	789	888	986
Ak .986		Throw	7	10	12	15	17	20	22	25
20x14	21 3/8 x 15 3/8	Cfm	348	464	580	696	812	928	1044	1160
Ak 2.260		Throw	7	10	12	15	17	20	22	25
20x16	21 3/8 x 17 3/8	Cfm	373	497	622	746	870	994	1119	1243
Ak 1.243		Throw	7	10	12	15	17	20	22	25

Engineer's specs continued on page 54

RVML SERIES COMMERCIAL SIDEWALL/CEILING SUPPLY DIFFUSERS (CONT'D)

UNIT SIZE	OVERALL SIZE	FACE VELOCITY	300	400	500	600	700	800	900	1000
		PRESSURE LOSS	.006	.010	.016	.022	.031	.040	.050	.062
20x18	21 3/8 x 19 3/8	Cfm	425	567	708	850	992	1133	1275	1417
Ak 1.417		Throw	7	10	12	15	17	20	22	25
20x20	21 3/8 x 21 3/8	Cfm	479	639	799	958	1118	1278	1438	1597
Ak 1.597		Throw	7	10	12	15	17	20	22	25
24x4	25 3/8 x 5 3/8	Cfm	104	139	174	208	243	278	313	347
Ak .347		Throw	7	10	12	15	17	20	22	25
24x6	25 3/8 x 7 3/8	Cfm	169	225	281	338	394	450	506	563
Ak .563		Throw	9	12	15	18	21	23	26	29
24x8	25 3/8 x 9 3/8	Cfm	231	308	385	463	540	617	694	771
Ak .771		Throw	10	13	17	19	23	25	28	31
24x10	25 3/8 x 11 3/8	Cfm	294	392	490	588	685	783	881	979
Ak .979		Throw	7	10	12	15	17	20	22	25
24x12	25 3/8 x 13 3/8	Cfm	358	478	597	717	836	956	1075	1194
Ak 1.194		Throw	7	10	12	15	17	20	22	25
24x14	25 3/8 x 15 3/8	Cfm	421	561	701	842	982	1122	1263	1403
Ak 1.403		Throw	7	10	12	15	17	20	22	25
24x16	25 3/8 x 17 3/8	Cfm	452	603	753	904	1055	1206	1356	1507
Ak 1.507		Throw	7	10	12	15	17	20	22	25
24x18	25 3/8 x 19 3/8	Cfm	517	689	861	1033	1206	1378	1550	1722
Ak 1.722		Throw	7	10	12	15	17	20	22	25
24x24	25 3/8 x 25 3/8	Cfm	706	942	1177	1413	1648	1883	2119	2354
Ak 2.354		Throw	7	10	12	15	17	20	22	25
30x6	31 3/8 x 7 3/8	Cfm	213	283	354	425	496	567	638	708
Ak .708		Throw	9	15	19	23	27	31	34	38
30x8	31 3/8 x 9 3/8	Cfm	292	389	486	583	681	778	875	972
Ak .972		Throw	12	15	20	23	28	31	33	39
30x10	31 3/8 x 11 3/8	Cfm	371	494	618	742	865	989	1113	1236
Ak 1.236		Throw	7	10	12	15	17	20	22	25
30x12	31 3/8 x 13 3/8	Cfm	450	600	750	900	1050	1200	1350	1500
Ak 1.500		Throw	7	10	12	15	17	20	22	25
30x14	31 3/8 x 15 3/8	Cfm	531	708	885	1063	1240	1417	1594	1771
Ak 1.771		Throw	7	10	12	15	17	20	22	25
30x16	31 3/8 x 17 3/8	Cfm	571	761	951	1142	1332	1522	1713	1903
Ak 1.903		Throw	7	10	12	15	17	20	22	25
30x18	31 3/8 x 19 3/8	Cfm	650	867	1083	1300	1517	1733	1950	2167
Ak 2.167		Throw	7	10	12	15	17	20	22	25
36x6	37 3/8 x 7 3/8	Cfm	256	342	427	513	598	683	769	854
Ak .854		Throw	7	10	12	15	17	20	22	25
36x10	37 3/8 x 11 3/8	Cfm	448	597	747	896	1045	1194	1344	1493
Ak 1.493		Throw	7	10	12	15	17	20	22	25
36x12	37 3/8 x 13 3/8	Cfm	544	725	906	1088	1269	1450	1631	1813
Ak 1.813		Throw	7	10	12	15	17	20	22	25
36x14	37 3/8 x 15 3/8	Cfm	600	800	1000	1200	1400	1600	1800	2000
Ak 2.000		Throw	7	10	12	15	17	20	22	25

Terminal Velocity of 75 fpm Always specify width by height

Less than or equal to NC 30

NC 35

Noise Criteria Chart located on page 96

RHML COMMERCIAL SIDEWALL/CEILING SUPPLY DIFFUSERS (Horizontal)

Sidewall/Ceiling
Single Deflection-Steel Frame
Multi-Shutter Damper
Adjustable Steel Rollform Horizontal Face Blades
White Finish

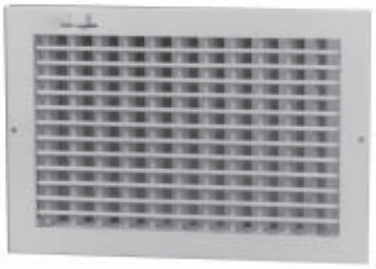

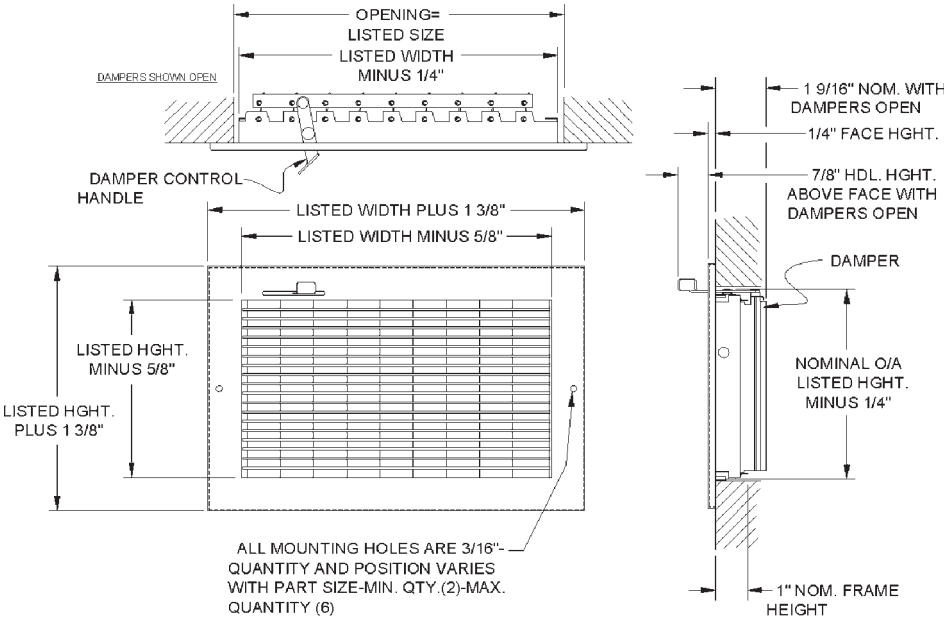

RHML SERIES COMMERCIAL SIDEWALL/CEILING SUPPLY DIFFUSERS

UNIT SIZE	OVERALL SIZE	FACE VELOCITY	300	400	500	600	700	800	900	1000
		PRESSURE LOSS	.006	.010	.016	.022	.031	.040	.050	.062
8x4	9 x 3/8 x 5 3/8	Cfm	38	50	63	75	88	100	113	125
Ak .125		Throw	4	5	7	8	9	11	12	13
8x6	9 3/8 x 7 3/8	Cfm	58	78	97	117	136	156	175	194
Ak .194		Throw	5	7	8	10	12	14	15	17
8x8	9 3/8 x 9 3/8	Cfm	77	103	128	154	180	206	231	257
Ak .257		Throw	6	7	9	11	13	15	17	19
10x4	11 3/8 x 5 3/8	Cfm	48	64	80	96	112	128	144	160
Ak .160		Throw	5	6	8	9	11	12	13	14
10x6	11 3/8 x 7 3/8	Cfm	73	97	122	146	170	194	219	24
Ak .243		Throw	6	8	9	11	13	15	17	19
10x8	11 3/8 x 9 3/8	Cfm	100	133	167	200	233	267	300	333
Ak .333		Throw	7	8	10	12	14	16	17	21
10x10	11 3/8 x 11 3/8	Cfm	125	167	208	250	292	333	375	417
Ak .417		Throw	7	9	12	14	16	18	20	23
12x4	13 3/8 x 5 3/8	Cfm	58	78	97	117	136	156	175	194
Ak .194		Throw	5	7	8	10	12	14	15	17
12x6	13 3/8 x 7 3/8	Cfm	90	119	149	179	209	239	269	299
Ak .299		Throw	7	8	10	12	15	17	19	21
12x8	13 3/8 x 9 3/8	Cfm	121	161	201	242	282	322	363	403
Ak .403		Throw	7	9	11	13	18	17	19	22

Engineer's specs continued on page 56

RHML SERIES COMMERCIAL SIDEWALL/CEILING SUPPLY DIFFUSERS (CONT'D)

UNIT SIZE	OVERALL SIZE	FACE VELOCITY	300	400	500	600	700	800	900	1000
		PRESSURE LOSS	.006	.010	.016	.022	.031	.040	.050	.062
12x10	13 3/8 x 11 3/8	Cfm	152	203	253	304	355	406	456	507
Ak .507		Throw	8	11	13	16	19	22	25	28
12x12	13 3/8 x 13 3/8	Cfm	183	244	306	367	428	489	550	611
Ak .611		Throw	9	11	14	17	20	22	25	29
14x4	15 3/8 x 5 3/8	Cfm	69	92	115	138	160	183	206	229
Ak .299		Throw	5	7	9	11	13	15	17	18
14x6	15 3/8 x 7 3/8	Cfm	104	139	174	208	243	278	313	347
Ak .347		Throw	7	8	11	13	16	18	20	23
14x8	15 3/8 x 9 3/8	Cfm	142	189	236	283	331	378	425	472
Ak .472		Throw	8	9	12	14	17	19	21	24
14x10	15 3/8 x 11 3/8	Cfm	177	236	295	354	413	472	531	590
Ak .590		Throw	9	11	13	16	19	22	25	28
14x12	15 3/8 x 13 3/8	Cfm	215	286	358	429	501	572	644	715
Ak .715		Throw	9	12	14	18	22	24	27	31
16x4	17 3/8 x 5 3/8	Cfm	73	97	122	146	170	194	219	243
Ak .243		Throw	7	10	12	15	17	20	22	25
16x6	17 3/8 x 7 3/8	Cfm	113	150	188	225	263	300	338	375
Ak .375		Throw	7	10	12	15	17	20	22	25
16x8	17 3/8 x 9 3/8	Cfm	152	203	253	304	355	406	456	507
Ak .507		Throw	8	10	13	15	18	20	22	25
16x10	17 3/8 x 11 3/8	Cfm	192	256	319	383	447	511	575	639
Ak .639		Throw	7	10	12	15	17	20	22	25
16x12	17 3/8 x 14 3/8	Cfm	231	308	385	463	540	617	694	771
Ak .771		Throw	7	10	12	15	17	20	22	25
18x4	19 3/8 x 5 3/8	Cfm	83	111	139	167	194	222	250	278
Ak .278		Throw	7	10	12	15	17	20	22	25
18x6	19 3/8 x 7 3/8	Cfm	129	172	215	258	301	344	388	431
Ak .431		Throw	8	11	13	16	19	22	24	27
18x8	19 3/8 x 9 3/8	Cfm	173	231	288	346	403	461	519	576
Ak .576		Throw	9	11	13	16	19	22	25	28
18x10	19 3/8 x 11 3/8	Cfm	219	292	365	438	510	583	656	729
Ak .729		Throw	7	10	12	15	17	20	22	25
18x12	19 3/8 x 13 3/8	Cfm	263	350	438	525	613	700	788	875
Ak .875		Throw	7	10	12	15	17	20	22	25
20x4	21 3/8 x 5 3/8	Cfm	94	125	156	188	219	250	281	313
Ak .313		Throw	7	10	12	15	17	20	22	25
20x6	21 3/8 x 7 3/8	Cfm	144	192	240	288	335	383	431	479
Ak .479		Throw	8	11	14	16	20	23	25	28
20x8	21 3/8 x 9 3/8	Cfm	194	258	323	388	452	517	581	646
Ak .646		Throw	9	12	15	18	21	23	26	29
20x10	21 3/8 x 11 3/8	Cfm	244	325	406	488	569	650	731	813
Ak .813		Throw	7	10	12	15	17	20	22	25
20x12	21 3/8 x 13 3/8	Cfm	296	394	493	592	690	789	888	986
Ak .986		Throw	7	10	12	15	17	20	22	25
24x4	25 3/8 x 5 3/8	Cfm	115	153	191	229	267	306	344	382
Ak .382		Throw	7	10	12	15	17	20	22	25
24x6	25 3/8 x 7 3/8	Cfm	175	233	292	350	408	467	525	583
Ak .583		Throw	9	12	15	18	21	23	26	29
24x8	25 3/8 x 9 3/8	Cfm	238	317	396	475	554	633	713	792
Ak .792		Throw	10	13	17	19	23	25	28	31
24x10	25 3/8 x 11 3/8	Cfm	298	397	497	596	695	794	894	993
Ak .993		Throw	7	10	12	15	17	20	22	25
24x12	25 3/8 x 13 3/8	Cfm	360	481	601	721	841	961	1081	1201
Ak 1.201		Throw	7	10	12	15	17	20	22	25

Terminal Velocity of 75 fpm Always specify width by height

Less than or equal to NC 30

NC 35

Noise Criteria Chart located on page 96

RGV COMMERCIAL SIDEWALL/CEILING SUPPLY GRILLES (Vertical)

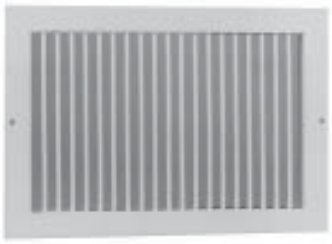

Sidewall/Ceiling
Single Deflection-Steel Frame
Adjustable Steel Rollform Vertical Face Blades
White Finish

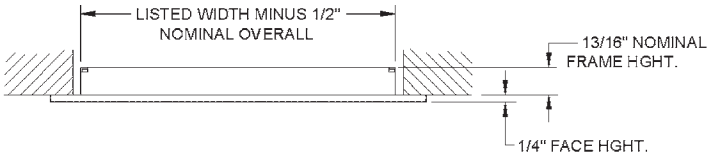

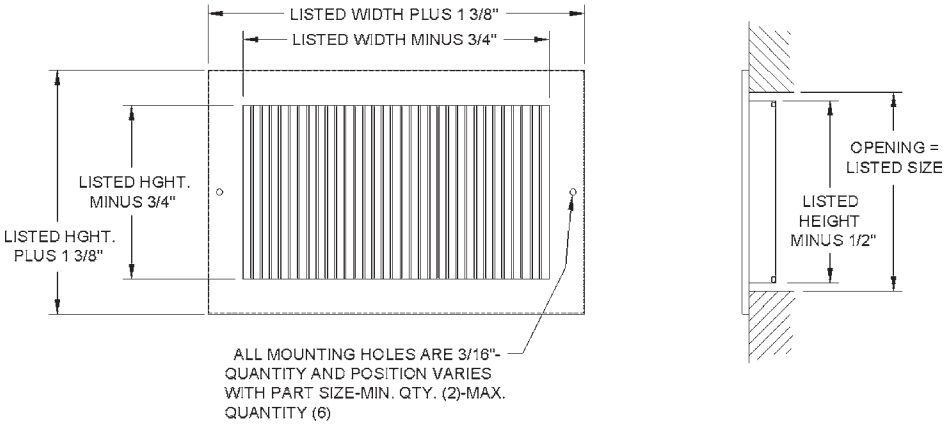

RGV-O COMMERCIAL SIDEWALL/CEILING SUPPLY GRILLES (Vertical)

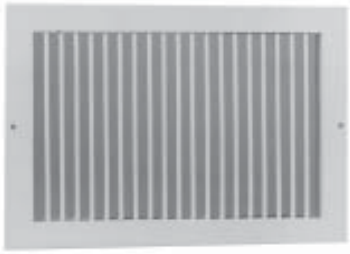

Sidewall/Ceiling
Single Deflection-Steel Frame
Fixed Steel Rollform Vertical Blades - 0½ Angle
White Finish

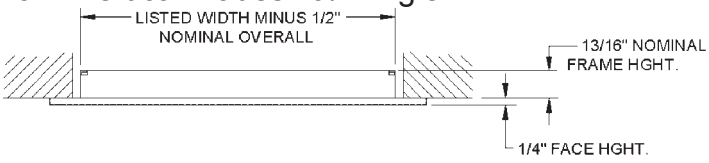

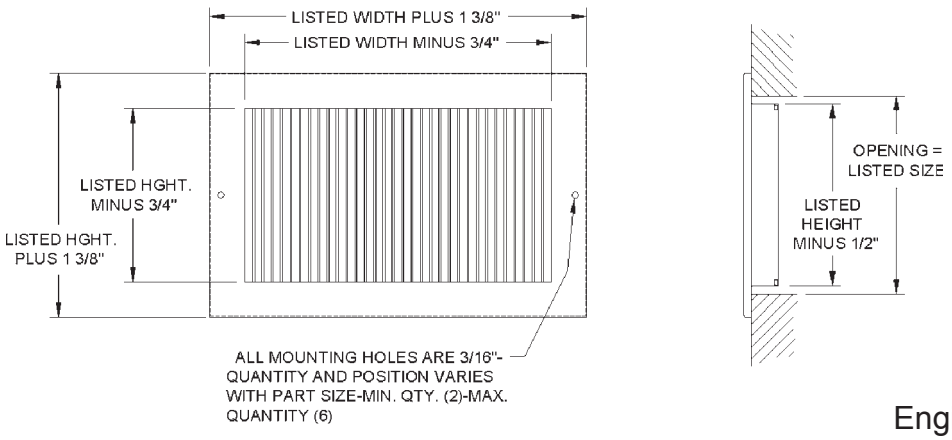

Engineer's specs on page 58

RGV/RGV-O SERIES COMMERCIAL SIDEWALL/CEILING SUPPLY GRILLES

UNIT SIZE	OVERALL SIZE	FACE VELOCITY	300	400	500	600	700	800	900	1000
		PRESSURE LOSS	.006	.010	.016	.022	.031	.040	.050	.062
6x4	7 3/8 x 5 3/8	Cfm	27	36	45	54	63	72	81	90
Ak .090		Throw	3	4	5	7	8	9	10	11
6x6	7 3/8 x 7 3/8	Cfm	42	56	69	83	97	111	125	139
Ak .139		Throw	5	6	7	9	10	12	13	15
8x4	9 3/8 x 5 3/8	Cfm	35	47	59	71	83	94	106	118
Ak .118		Throw	4	5	7	8	9	11	12	13
8x6	9 3/8 x 7 3/8	Cfm	56	75	94	113	131	150	169	188
Ak .188		Throw	5	7	8	10	12	14	15	17
8x8	9 3/8 x 9 3/8	Cfm	77	103	128	154	180	206	231	257
Ak .257		Throw	6	7	9	11	13	15	17	19
10x4	11 3/8 x 5 3/8	Cfm	44	58	73	88	102	117	131	146
Ak .146		Throw	5	6	8	9	11	12	13	14
10x5	11 3/8 x 6 3/8	Cfm	58	78	97	117	136	156	175	194
Ak .194		Throw	5	7	8	11	12	13	15	16
10x6	11 3/8 x 7 3/8	Cfm	71	94	118	142	165	189	213	236
Ak .236		Throw	6	8	9	11	13	15	17	19
10x8	11 3/8 x 9 3/8	Cfm	98	131	163	196	228	261	294	326
Ak .326		Throw	7	8	10	12	14	16	17	21
10x10	11 3/8 x 11 3/8	Cfm	125	167	208	250	292	333	375	417
Ak .417		Throw	7	9	12	14	16	18	20	23
12x4	13 3/8 x 5 3/8	Cfm	54	72	90	108	126	144	163	181
Ak .181		Throw	5	7	8	10	12	14	15	17
12x5	13 3/8 x 6 3/8	Cfm	69	92	115	138	160	183	206	229
Ak .229		Throw	6	7	9	11	13	15	17	19
12x6	13 3/8 x 7 3/8	Cfm	85	114	142	171	199	228	256	285
Ak .285		Throw	7	8	10	12	15	17	19	21
12x8	13 3/8 x 9 3/8	Cfm	117	156	194	233	272	311	350	389
Ak .389		Throw	7	9	11	13	18	17	19	22
12x10	13 3/8 x 11 3/8	Cfm	150	200	250	300	350	400	450	500
Ak .500		Throw	8	11	13	16	19	22	25	28
12x12	13 3/8 x 13 3/8	Cfm	183	244	306	367	428	489	550	611
Ak .611		Throw	9	11	14	17	20	22	25	29
14x4	15 3/8 x 5 3/8	Cfm	63	83	104	125	146	167	188	208
Ak .208		Throw	5	7	9	11	13	15	17	18
14x6	15 3/8 x 7 3/8	Cfm	94	125	156	188	219	250	281	313
Ak .313		Throw	7	8	11	13	16	18	20	23
14x8	15 3/8 x 9 3/8	Cfm	138	183	229	275	321	367	413	458
Ak .458		Throw	8	9	12	14	17	19	21	24
14x10	15 3/8 x 11 3/8	Cfm	175	233	292	350	408	467	525	583
Ak .583		Throw	9	11	13	16	19	22	25	28
14x12	15 3/8 x 13 3/8	Cfm	215	286	358	429	501	572	644	715
Ak .715		Throw	9	12	14	18	22	24	27	31
14x14	15 3/8 x 15 3/8	Cfm	252	336	420	504	588	672	756	840
Ak .840		Throw	9	15	19	23	27	31	34	38
16x4	17 3/8 x 5 3/8	Cfm	69	92	115	138	160	183	206	229
Ak .229		Throw	7	10	12	15	17	20	22	25
16x6	17 3/8 x 7 3/8	Cfm	110	147	184	221	258	294	331	368
Ak .368		Throw	7	10	12	15	17	20	22	25
16x8	17 3/8 x 9 3/8	Cfm	150	200	250	300	350	400	450	500
Ak .500		Throw	8	10	13	15	18	20	22	25
16x10	17 3/8 x 11 3/8	Cfm	192	256	319	383	447	511	575	639
Ak .639		Throw	7	10	12	15	17	20	22	25
16x12	17 3/8 x 13 3/8	Cfm	233	311	389	467	544	622	700	778
Ak .778		Throw	7	10	12	15	17	20	22	25
16x16	17 3/8 x 17 3/8	Cfm	296	394	493	592	690	789	888	986
Ak .986		Throw	12	15	20	23	28	31	33	39
18x4	19 3/8 x 5 3/8	Cfm	77	103	128	154	180	206	231	257
Ak .257		Throw	7	10	12	15	17	20	22	25
18x6	19 3/8 x 7 3/8	Cfm	125	167	208	250	292	333	375	417
Ak .417		Throw	8	11	13	16	19	22	24	27
18x8	19 3/8 x 9 3/8	Cfm	171	228	285	342	399	456	513	569
Ak .569		Throw	9	11	13	16	19	22	25	28
18x10	19 3/8 x 11 3/8	Cfm	217	289	361	433	506	578	650	722
Ak .722		Throw	7	10	12	15	17	20	22	25
18x12	19 3/8 x 13 3/8	Cfm	265	353	441	529	617	706	794	882
Ak .882		Throw	7	10	12	15	17	20	22	25

Engineer's specs continued on page 59

RGV/RGV-O SERIES COMMERCIAL SIDEWALL/CEILING SUPPLY GRILLES (CONT'D)

UNIT SIZE	OVERALL SIZE	FACE VELOCITY	300	400	500	600	700	800	900	1000
		PRESSURE LOSS	.006	.010	.016	.022	.031	.040	.050	.062
18x16	19 3/8 x 17 3/8	Cfm	333	444	556	667	778	889	1000	1111
Ak 1.111		Throw	7	10	12	15	17	20	22	25
18x18	19 3/8 x 19 3/8	Cfm	381	508	635	763	890	1017	1144	1271
Ak 1.271		Throw	7	10	12	15	17	20	22	25
20x4	21 3/8 x 5 3/8	Cfm	88	117	146	175	204	233	263	292
Ak .292		Throw	7	10	12	15	17	20	22	25
20x6	21 3/8 x 7 3/8	Cfm	140	186	233	279	326	372	419	465
Ak .465		Throw	8	11	14	16	20	23	25	28
20x8	21 3/8 x 9 3/8	Cfm	192	256	319	383	447	511	575	639
Ak .639		Throw	9	12	15	18	21	23	26	29
20x10	21 3/8 x 11 3/8	Cfm	244	325	406	488	569	650	731	813
Ak .813		Throw	7	10	12	15	17	20	22	25
20x12	21 3/8 x 13 3/8	Cfm	296	394	493	592	690	789	888	986
Ak .986		Throw	7	10	12	15	17	20	22	25
20x14	21 3/8 x 15 3/8	Cfm	348	464	580	696	812	928	1044	1160
Ak 1.160		Throw	7	10	12	15	17	20	22	25
20x16	21 3/8 x 17 3/8	Cfm	373	497	622	746	870	994	1119	1243
Ak 1.243		Throw	7	10	12	15	17	20	22	25
20x18	21 3/8 x 19 3/8	Cfm	425	567	708	850	992	1133	1275	1417
Ak 1.417		Throw	7	10	12	15	17	20	22	25
20x20	21 3/8 x 21 3/8	Cfm	479	639	799	958	1118	1278	1438	1597
Ak 1.597		Throw	7	10	12	15	17	20	22	25
24x4	25 3/8 x 5 3/8	Cfm	104	139	174	208	243	278	313	347
Ak .347		Throw	7	10	12	15	17	20	22	25
24x6	25 3/8 x 7 3/8	Cfm	169	225	281	338	394	450	506	563
Ak .563		Throw	9	12	15	18	21	23	26	29
24x8	25 3/8 x 9 3/8	Cfm	231	308	385	463	540	617	694	771
Ak .771		Throw	10	13	17	19	23	25	28	31
24x10	25 3/8 x 11 3/8	Cfm	294	392	490	588	685	783	881	979
Ak .979		Throw	7	10	12	15	17	20	22	25
24x12	25 3/8 x 13 3/8	Cfm	358	478	597	717	836	956	1075	1194
Ak 1.194		Throw	7	10	12	15	17	20	22	25
24x12	25 3/8 x 13 3/8	Cfm	421	561	701	842	982	1122	1263	1403
Ak 1.403		Throw	7	10	12	15	17	20	22	25
24x16	25 3/8 x 17 3/8	Cfm	452	603	753	904	1055	1206	1356	1507
Ak 1.507		Throw	7	10	12	15	17	20	22	25
24x18	25 3/8 x 19 3/8	Cfm	517	689	861	1033	1206	1378	1550	1722
Ak 1.722		Throw	7	10	12	15	17	20	22	25
24x24	25 3/8 x 25 3/8	Cfm	706	942	1177	1413	1648	1883	2119	2354
Ak 2.354		Throw	7	10	12	15	17	20	22	25
30x6	31 3/8 x 7 3/8	Cfm	213	283	354	425	496	567	638	708
Ak .708		Throw	9	15	19	23	27	31	34	38
30x8	31 3/8 x 9 3/8	Cfm	292	389	486	583	681	778	875	972
Ak .972		Throw	12	15	20	23	28	31	33	39
30x10	31 3/8 x 11 3/8	Cfm	371	494	618	742	865	989	1113	1236
Ak 1.236		Throw	7	10	12	15	17	20	22	25
30x12	31 3/8 x 13 3/8	Cfm	450	600	750	900	1050	1200	1350	1500
Ak 1.500		Throw	7	10	12	15	17	20	22	25
30x14	31 3/8 x 15 3/8	Cfm	531	708	885	1063	1240	1417	1594	1771
Ak 1.771		Throw	7	10	12	15	17	20	22	25
30x16	31 3/8 x 17 3/8	Cfm	571	761	951	1142	1332	1522	1713	1903
Ak 1.903		Throw	7	10	12	15	17	20	22	25
30x18	31 3/8 x 19 3/8	Cfm	650	867	1083	1300	1517	1733	1950	2167
Ak 2.167		Throw	7	10	12	15	17	20	22	25
36x6	37 3/8 x 7 3/8	Cfm	256	342	427	513	598	683	769	854
Ak .854		Throw	7	10	12	15	17	20	22	25
36x10	37 3/8 x 11 3/8	Cfm	448	597	747	896	1045	1194	1344	1493
Ak 1.493		Throw	7	10	12	15	17	20	22	25
36x12	37 3/8 x 13 3/8	Cfm	544	725	906	1088	1269	1450	1631	1813
Ak 1.813		Throw	7	10	12	15	17	20	22	25
36x14	37 3/8 x 15 3/8	Cfm	600	800	1000	1200	1400	1600	1800	2000
Ak 2.000		Throw	7	10	12	15	17	20	22	25

Less than or equal to NC 30 ☐ Always specify width by height

NC 35 ☐

Noise Criteria Chart located on page 96

RGH COMMERCIAL SIDEWALL/CEILING
SUPPLY GRILLES (Horizontal)

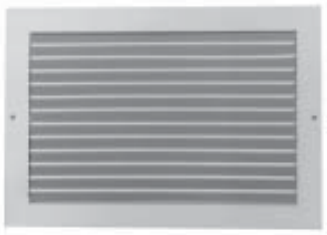

Sidewall/Ceiling
Single Deflection-Steel Frame
Adjustable Steel Rollform Horizontal Face Blades
White Finish

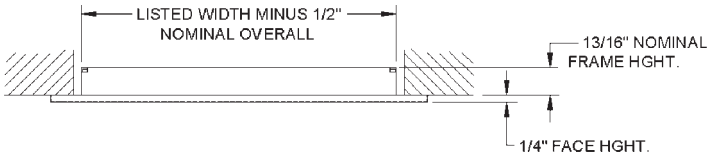

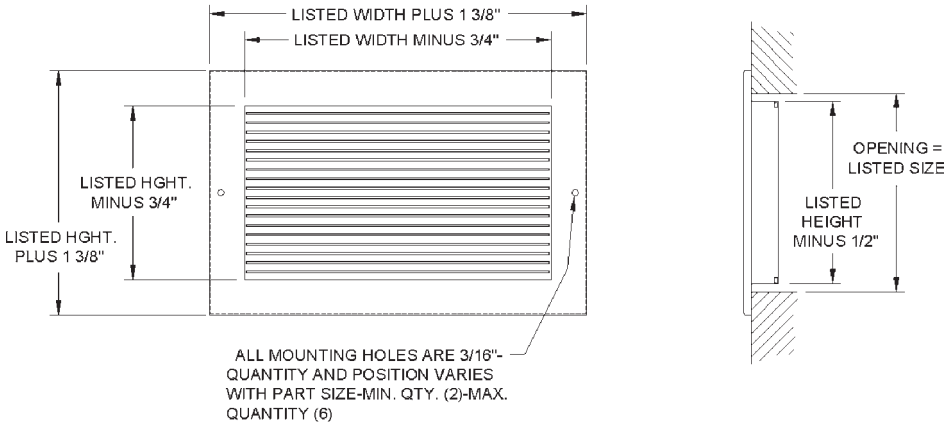

RGH-O COMMERCIAL SIDEWALL/CEILING
SUPPLY GRILLES (Horizontal)

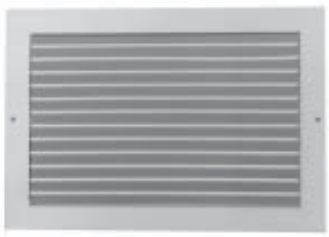

Sidewall/Ceiling
Single Deflection-Steel Frame
Fixed Steel Rollform Horizontal Blades - 0½ Angle
White Finish

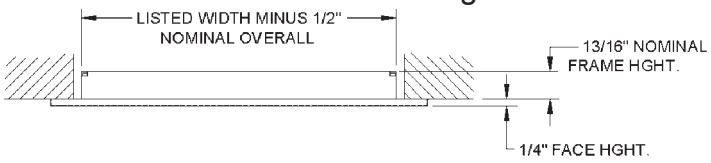

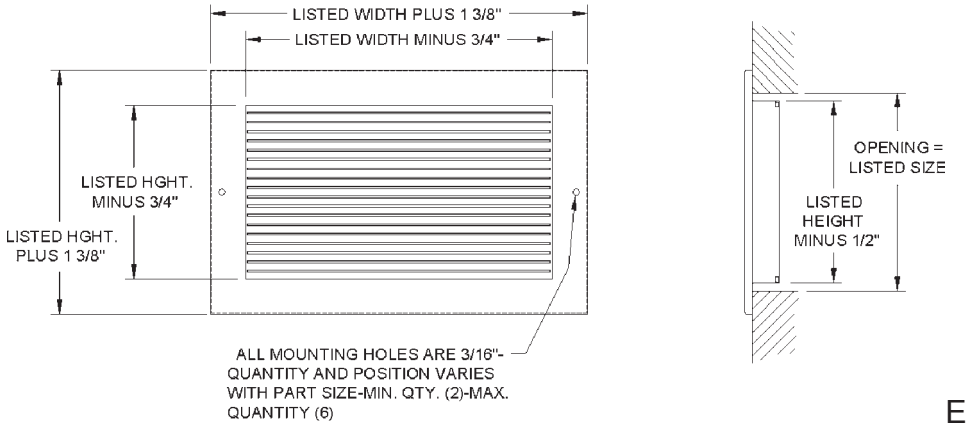

Engineer's specs on page 61

RGH/RGH-O SERIES COMMERCIAL SIDEWALL/CEILING SUPPLY GRILLES

UNIT SIZE	OVERALL SIZE	FACE VELOCITY	300	400	500	600	700	800	900	1000
8x4	9 3/8 x 5 3/8	Cfm	38	50	63	75	88	100	113	125
Ak .125		Pt	.002	.003	.004	.008	.011	.012	.014	.016
8x6	9 3/8 x 7 3/8	Cfm	58	78	97	116	136	155	175	194
Ak .194		Pt	.006	.010	.016	.024	.032	.040	.052	.064
8x8	9 3/8 x 9 3/8	Cfm	77	103	129	154	180	206	231	257
Ak .257		Pt	.007	.011	.020	.028	.036	.044	.062	.080
10x4	11 3/8 x 5 3/8	Cfm	48	64	80	96	112	128	144	160
Ak .160		Pt	.033	.005	.008	.012	.016	.020	.027	.032
10x6	11 3/8 x 7 3/8	Cfm	73	97	122	146	170	194	219	243
Ak .243		Pt	.007	.011	.020	.028	.036	.044	.062	.080
10x8	11 3/8 x 9 3/8	Cfm	100	133	167	200	233	267	300	333
Ak .333		Pt	.003	.005	.008	.012	.016	.020	.027	.032
10x10	11 3/8 x 11 3/8	Cfm	125	167	208	250	292	333	375	417
Ak .417		Pt	.008	.013	.022	.032	.042	.052	.070	.088
12x4	13 3/8 x 5 3/8	Cfm	58	78	97	116	136	155	175	194
Ak .194		Pt	.006	.010	.016	.024	.032	.040	.052	.064
12x6	133 3/8 x 7 3/8	Cfm	89	119	149	178	208	238	267	297
Ak .297		Pt	.009	.014	.026	.036	.046	.056	.080	.104
12x8	13 3/8 x 9 3/8	Cfm	121	161	201	242	282	322	363	403
Ak .403		Pt	.003	.005	.008	.012	.016	.020	.027	.032
12x10	13 3/8 x 11 3/8	Cfm	152	203	254	302	355	406	456	507
Ak .507		Pt	.008	.013	.022	.032	.042	.052	.070	.088
12x12	13 3/8 x 13 3/8	Cfm	183	244	306	367	428	489	550	611
Ak .611		Pt	.008	.013	.022	.032	.042	.052	.070	.088
14x4	15 3/8 x 5 3/8	Cfm	69	92	115	138	161	184	207	230
Ak .230		Pt	.005	.008	.014	.020	.026	.032	.044	.056
14x6	15 3/8 x 7 3/8	Cfm	104	139	174	208	243	278	313	347
Ak .347		Pt	.003	8	11	13	16	18	20	23
14x8	15 3/8 x 9 3/8	Cfm	142	.005	.008	.012	.016	.020	.027	.032
Ak .472		Pt	.006	.010	.016	.024	.032	.040	.052	.064
14x10	15 3/8 x 11 3/8	Cfm	177	236	295	354	413	472	531	590
Ak .590		Pt	.008	.013	.022	.032	.042	.052	.070	.088
14x12	15 3/8 x 13 3/8	Cfm	215	286	358	429	501	572	644	715
Ak .715		Pt	.006	.010	.016	.024	.032	.040	.052	.064
16x4	17 3/8 x 5 3/8	Cfm	73	97	122	146	170	194	219	243
Ak .243		Pt	.007	.011	.020	.028	.036	.044	.062	.080
16x6	17 3/8 x 7 3/8	Cfm	113	150	188	225	263	300	338	375
Ak .375		Pt	.003	.005	.008	.012	.016	.020	.027	.032
16x8	17 3/8 x 9 3/8	Cfm	152	203	254	302	355	406	456	507
Ak .507		Pt	.008	.013	.022	.032	.042	.052	.070	.088
16x10	17 3/8 x 11 3/8	Cfm	192	256	319	383	447	511	575	639
Ak .639		Pt	.006	.010	.016	.024	.032	.040	.052	.064
16x12	17 3/8 x 13 3/8	Cfm	231	308	385	463	540	617	694	771
Ak .771		Pt	.004	.006	.008	.016	.020	.024	.028	.032
18x4	19 3/8 x 5 3/8	Cfm	83	111	139	167	194	222	250	278
Ak .278		Pt	.009	.014	.026	.036	.046	.056	.080	.104
18x6	19 3/8 x 7 3/8	Cfm	129	172	215	258	301	344	388	431
Ak .431		Pt	.006	.010	.016	.024	.032	.040	.052	.064
18x8	19 3/8 x 9 3/8	Cfm	173	231	288	346	404	461	519	576
Ak .576		Pt	.008	.013	.022	.032	.042	.052	.070	.088
18x10	19 3/8 x 11 3/8	Cfm	219	292	365	438	510	583	656	729
Ak .729		Pt	.007	.011	.020	.028	.036	.044	.062	.080
18x12	19 3/8 x 13 3/8	Cfm	263	350	438	525	613	700	788	875
Ak .875		Pt	.006	.010	.016	.024	.032	.040	.052	.064
20x4	21 3/8 x 5 3/8	Cfm	94	125	156	188	219	250	281	313
Ak .313		Pt	.003	.005	.008	.012	.016	.020	.027	.032
20x6	21 3/8 x 7 3/8	Cfm	144	192	240	288	335	383	431	479
Ak .479		Pt	.008	.013	.022	.032	.042	.052	.070	.088
20x8	21 3/8 x 9 3/8	Cfm	194	258	323	388	452	517	581	646
Ak .646		Pt	.006	.010	.016	.024	.032	.040	.052	.064
20x10	21 3/8 x 11 3/8	Cfm	244	325	406	488	569	650	731	813
Ak .813		Pt	.004	.006	.008	.016	.020	.024	.028	.032
20x12	21 3/8 x 13 3/8	Cfm	296	394	493	592	690	789	888	986
Ak .986		Pt	.004	.006	.008	.016	.024	.024	.028	.032

Engineer's specs continued on page 62

RGH/RGH-O SERIES COMMERCIAL SIDEWALL/CEILING SUPPLY GRILLES (CONT'D)

UNIT SIZE	OVERALL SIZE	FACE VELOCITY	300	400	500	600	700	800	900	1000
24x4	25 3/8 x 5 3/8	Cfm	115	153	191	229	267	306	344	382
Ak .382		Pt	.003	.005	.008	.012	.016	.020	.027	.032
24x6	25 3/8x 7 3/8	Cfm	175	233	292	350	408	467	525	583
Ak .583		Pt	.008	.013	.022	.032	.042	.052	.070	.088
24x8	25 3/8 x 9 3/8	Cfm	238	317	396	475	554	633	713	792
Ak .792		Pt	.004	.006	.008	.016	.020	.024	.028	.032
24x10	25 3/8 x 11 3/8	Cfm	298	397	497	596	695	794	894	993
Ak .993		Pt	.004	.006	.008	.016	.024	.024	.028	.032
24x12	25 3/8x 13 3/8	Cfm	360	481	601	721	841	961	1081	1201
Ak 1.201		Pt	.005	.008	.014	.020	.026	.032	.044	.056

Always specify width by height

RGH-40 COMMERCIAL
SIDEWALL CEILING RETURN GRILLES

Sidewall/Ceiling
Single Deflection Steel Frame
Horizontal Front Blade Fixed at 40½ Angle
White Finish

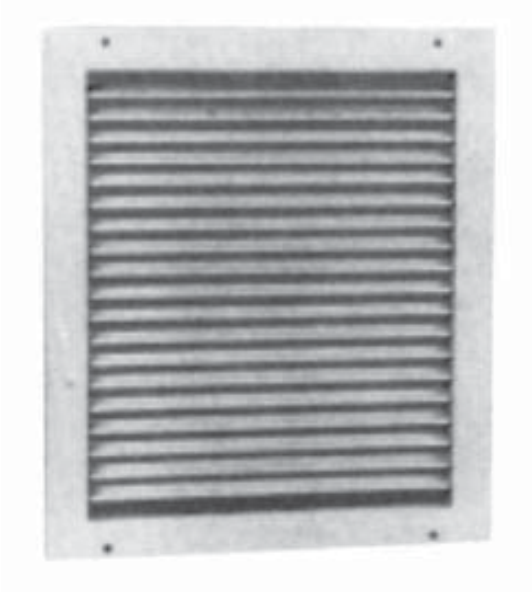

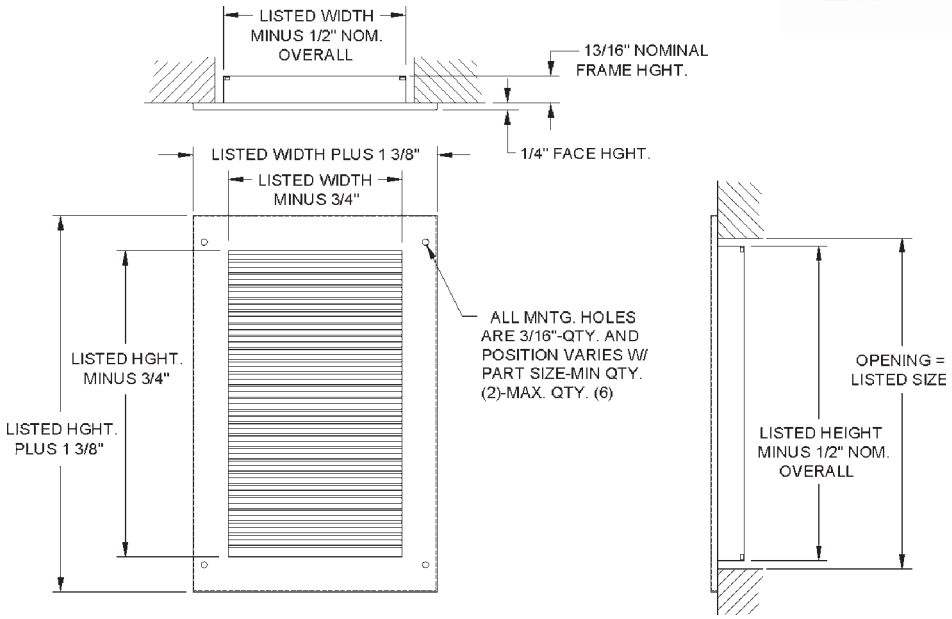

Engineer's specs on page 63

RGH-40 SERIES COMMERCIAL SIDEWALL/CEILING RETURN GRILLES

UNIT SIZE	OVERALL SIZE	FACE VELOCITY	300	400	500	600	700	800	900	1000
8x4	9 3/8 x 5 3/8	Cfm	38	50	63	75	88	100	113	125
Ak .125		Pt	.002	.003	.004	.008	.011	.012	.014	.016
8x6	9 3/8 x 7 3/8	Cfm	58	78	97	116	136	155	175	194
Ak .194		Pt	.006	.010	.016	.024	.032	.040	.052	.064
8x8	9 3/8 x 9 3/8	Cfm	77	103	129	154	180	206	231	257
Ak .257		Pt	.007	.011	.020	.028	.036	.044	.062	.080
10x4	11 3/8 x 5 3/8	Cfm	48	64	80	96	112	128	144	160
Ak .160		Pt	.003	.005	.008	.012	.016	.020	.027	.032
10x6	11 3/8 x 7 3/8	Cfm	73	97	122	146	170	194	219	243
Ak .243		Pt	.007	.011	.020	.028	.036	.044	.062	.080
10x8	11 3/8 x 9 3/8	Cfm	100	133	167	200	233	267	300	333
Ak .333		Pt	.003	.005	.008	.012	.016	.020	.027	.032
10x10	11 3/8 x 11 3/8	Cfm	125	167	208	250	292	333	375	417
Ak .417		Pt	.008	.013	.022	.032	.042	.052	.070	.088
12x4	13 3/8 x 5 3/8	Cfm	58	78	97	116	136	155	175	194
Ak .194		Pt	.006	.010	.016	.024	.032	.040	.052	.064
12x6	13 3/8 x 7 3/8	Cfm	89	119	149	178	208	238	267	297
Ak .297		Pt	.009	.014	.026	.036	.046	.056	.080	.104
12x8	13 3/8 x 9 3/8	Cfm	121	161	201	242	282	322	363	403
Ak .403		Pt	.003	.005	.008	.012	.016	.020	.027	.032
12x10	13 3/8 x 11 3/8	Cfm	152	203	254	302	355	406	456	507
Ak .507		Pt	.008	.013	.022	.032	.042	.052	.070	.088
12x12	13 3/8 x 13 3/8	Cfm	183	244	306	367	428	489	550	611
Ak .611		Pt	.008	.013	.022	.032	.042	.052	.070	.088
14x4	15 3/8 x 5 3/8	Cfm	69	92	115	138	161	184	207	230
Ak .230		Pt	.005	.008	.014	.020	.026	.032	.044	.056
14x6	15 3/8 x 7 3/8	Cfm	104	139	174	208	243	278	313	347
Ak .347		Pt	.003	.005	.008	.012	.016	.020	.027	.032
14x8	15 3/8 x 9 3/8	Cfm	142	189	236	283	331	378	425	472
Ak .472		Pt	.006	.010	.016	.024	.032	.040	.052	.064
14x10	15 3/8 x 11 3/8	Cfm	177	236	295	354	413	472	531	590
Ak .590		Pt	.008	.013	.022	.032	.042	.052	.070	.088
14x12	15 3/8 x 13 3/8	Cfm	215	286	358	429	501	572	644	715
Ak .715		Pt	.066	.010	.016	.024	.032	.040	.052	.064
16x4	17 3/8 x 5 3/8	Cfm	73	97	122	146	170	194	219	243
Ak .243		Pt	.007	.011	.020	.028	.036	.044	.062	.080
16x6	17 3/8 x 7 3/8	Cfm	113	150	188	225	263	300	338	375
Ak .375		Pt	.003	.005	.008	.012	.016	.020	.027	.032
16x8	17 3/8 x 9 3/8	Cfm	152	203	254	302	355	406	456	507
Ak .507		Pt	.008	.013	.022	.032	.042	.052	.070	.088
16x10	17 3/8 x 11 3/8	Cfm	192	256	319	383	447	511	575	639
Ak .639		Pt	.006	.010	.016	.024	.032	.040	.052	.064
16x12	17 3/8 x 13 3/8	Cfm	231	308	385	463	540	617	694	771
Ak .771		Pt	.004	.006	.008	.016	.020	.024	.028	.032
18x4	19 3/8 x 5 3/8	Cfm	83	111	139	167	194	222	250	278
Ak .278		Pt	.009	.014	.026	.036	.046	.056	.080	.104
18x6	19 3/8 x 7 3/8	Cfm	129	172	215	258	301	344	388	431
Ak .431		Pt	.006	.010	.016	.024	.032	.040	.052	.064
18x8	19 3/8 x 9 3/8	Cfm	173	231	288	346	404	461	519	576
Ak .576		Pt	.008	.013	.022	.032	.042	.052	.070	.088
18x10	19 3/8 x 11 3/8	Cfm	219	292	365	438	510	583	656	729
Ak .729		Pt	.007	.011	.020	.028	.036	.044	.062	.080
18x12	19 3/8 x 13 3/8	Cfm	263	350	438	525	613	700	788	875
Ak .875		Pt	.006	.010	.016	.024	.032	.040	.052	.064
20x4	21 3/8 x 5 3/8	Cfm	94	125	156	188	219	250	281	313
Ak .313		Pt	.003	.005	.008	.012	.016	.020	.027	.032
20x6	21 3/8 x 7 3/8	Cfm	144	192	240	288	335	383	431	479
Ak .479		Pt	.008	.013	.022	.032	.042	.052	.070	.088
20x8	21 3/8 x 9 3/8	Cfm	194	258	323	388	452	517	581	646
Ak .646		Pt	.006	.010	.016	.024	.032	.040	.052	.064
20x10	21 3/8 x 11 3/8	Cfm	244	325	406	488	569	650	731	813
Ak .813		Pt	.004	.006	.008	.016	.020	.024	.028	.032
20x12	21 3/8 x 13 3/8	Cfm	296	394	493	592	690	789	888	986
Ak .986		Pt	.004	.006	.008	.016	.020	.024	.028	.032

Engineer's specs continued on page 64

RGH-40 SERIES COMMERCIAL SIDEWALL/CEILING RETURN GRILLES (CONT'D)

UNIT SIZE	OVERALL SIZE	FACE VELOCITY	300	400	500	600	700	800	900	1000
24x4	25 3/8 x 5 3/8	Cfm	115	153	191	229	267	306	344	382
Ak .382		Pt	.003	.005	.008	.012	.016	.020	.027	.032
24x6	25 3/8x 7 3/8	Cfm	175	233	292	350	408	467	525	583
Ak .583		Pt	.008	.013	.022	.032	.042	.052	.070	.088
24x8	25 3/8 x 9 3/8	Cfm	238	317	396	475	554	633	713	792
Ak .792		Pt	.004	.006	.008	.016	.020	.024	.028	.032
24x10	25 3/8 x 11 3/8	Cfm	298	397	497	596	695	794	894	993
Ak .993		Pt	.004	.006	.008	.016	.020	.024	.028	.032
24x12	25 3/8 x 13 3/8	Cfm	360	481	601	721	841	961	1081	1201
Ak 1.201		Pt	.005	.008	.014	.020	.026	.032	.044	.056

Always specify width by height

HVG COMMERCIAL SIDEWALL/CEILING SUPPLY GRILLES (Horizontal)

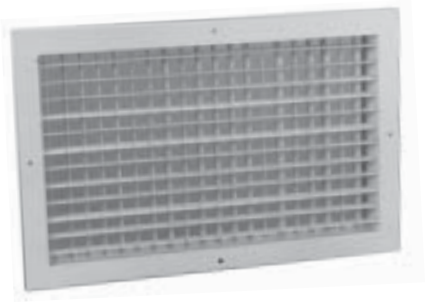

Sidewall/Ceiling
Double Deflection-Steel Frame
Adjustable Aluminum
Horizontal Front Blades
White Finish

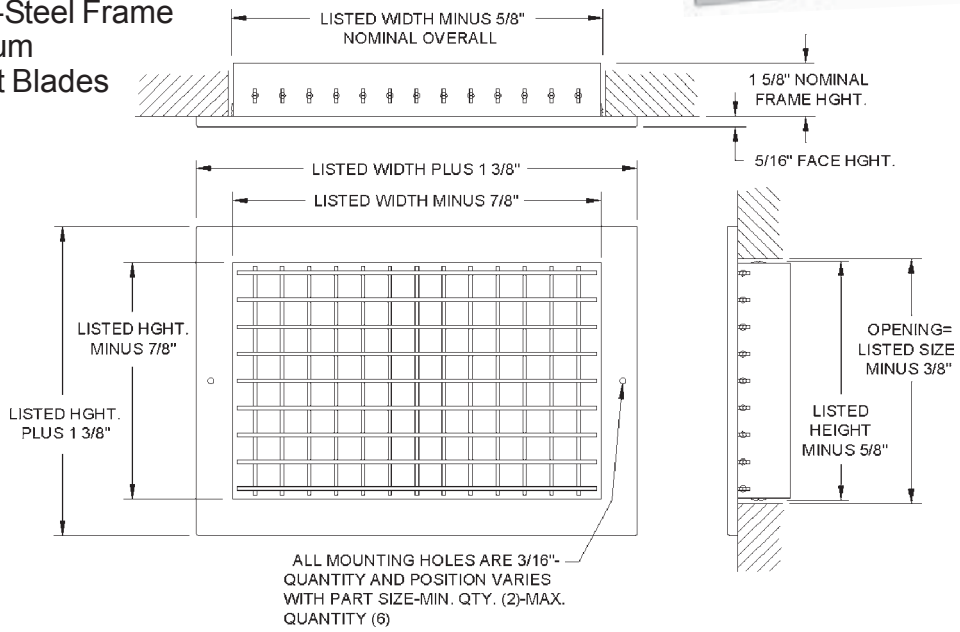

HVG SERIES COMMERCIAL SIDEWALL/CEILING SUPPLY GRILLES

UNIT SIZE	OVERALL SIZE	FACE VELOCITY	300	400	500	600	700	800	900	1000
		PRESSURE LOSS	.006	.010	.016	.022	.031	.040	.050	.062
6x4	7 3/8 x 5 3/8	Cfm	31	42	52	63	73	83	94	104
Ak .104		Throw	3	4	5	7	8	9	10	11
6x6	7 3/8 x 7 3/8	Cfm	50	67	83	100	117	133	150	167
Ak .167		Throw	5	6	7	9	10	12	13	15
8x4	9 3/8 x 5 3/8	Cfm	42	56	69	83	97	111	125	139
Ak .139		Throw	4	5	7	8	9	11	12	13
8x6	9 3/8x 7 3/8	Cfm	69	92	115	138	160	183	206	229
Ak .229		Throw	5	7	8	10	12	14	15	17
8x8	9 3/8 x 9 3/8	Cfm	96	128	160	192	224	256	288	319
Ak .319		Throw	6	7	9	11	13	15	17	19
10x4	11 3/8 x 5 3/8	Cfm	54	72	90	108	126	144	163	181
Ak .181		Throw	5	6	8	9	11	12	13	14

Engineer's specs continued on page 65

HVG SERIES COMMERCIAL SIDEWALL/CEILING SUPPLY GRILLES (CONT'D)

UNIT SIZE	OVERALL SIZE	FACE VELOCITY	300	400	500	600	700	800	900	1000
		PRESSURE LOSS	.006	.010	.016	.022	.031	.040	.050	.062
10x6	11 3/8 x 7 3/8	Cfm	90	119	149	179	209	239	269	299
Ak .299		Throw	6	8	9	11	13	15	17	19
10x8	11 3/8 x 9 3/8	Cfm	121	161	201	242	282	322	363	403
Ak .403		Throw	7	8	10	12	14	16	17	21
10x10	11 3/8 x 11 3/8	Cfm	156	208	260	313	365	417	469	521
Ak .521		Throw	7	9	12	14	16	18	20	23
12x4	13 3/8 x 5 3/8	Cfm	65	86	108	129	151	172	194	215
Ak .215		Throw	5	7	8	10	12	14	15	17
12x6	13 3/8 x 7 3/8	Cfm	108	144	181	217	253	289	325	361
Ak .361		Throw	7	8	10	12	15	17	19	21
12x8	13 3/8 x 9 3/8	Cfm	148	197	247	296	345	394	444	493
Ak .493		Throw	7	9	11	13	18	17	19	22
12x10	13 3/8 x 11 3/8	Cfm	190	253	316	379	442	506	569	632
Ak .632		Throw	8	11	13	16	19	22	25	28
12x12	13 3/8 x 13 3/8	Cfm	229	306	382	458	535	611	688	764
Ak .764		Throw	9	11	14	17	20	22	25	29
14x4	15 3/8 x 5 3/8	Cfm	77	103	128	154	180	206	231	257
Ak .257		Throw	5	7	9	11	13	15	17	18
14x6	15 3/8 x 7 3/8	Cfm	127	169	212	254	297	339	381	424
Ak .424		Throw	7	8	11	13	16	18	20	23
14x8	15 3/8 x 9 3/8	Cfm	173	231	288	346	403	461	519	576
Ak .576		Throw	8	9	12	14	17	19	21	24
14x10	15 3/8 x 11 3/8	Cfm	223	297	372	446	520	594	669	743
Ak .743		Throw	9	11	13	16	19	22	25	28
14x12	15 3/8 x 13 3/8	Cfm	269	358	448	538	627	717	806	896
Ak .896		Throw	9	12	14	18	22	24	27	31
16x4	17 3/8 x 5 3/8	Cfm	83	111	139	167	194	222	250	278
Ak .278		Throw	7	10	12	15	17	20	22	25
16x6	17 3/8 x 7 3/8	Cfm	135	181	226	271	316	361	406	451
Ak .451		Throw	7	10	12	15	17	20	22	25
16x8	17 3/8 x 9 3/8	Cfm	185	247	309	371	433	494	556	618
Ak .618		Throw	8	10	13	15	18	20	22	25
16x10	17 3/8 x 11 3/8	Cfm	240	319	399	479	559	639	719	799
Ak .799		Throw	7	10	12	15	17	20	22	25
16x12	17 3/8 x 13 3/8	Cfm	290	386	483	579	676	772	869	965
Ak .965		Throw	7	10	12	15	17	20	22	25
18x4	19 3/8 x 5 3/8	Cfm	94	125	156	188	219	250	281	313
Ak .313		Throw	7	10	12	15	17	20	22	25
18x6	19 3/8 x 7 3/8	Cfm	156	208	260	313	365	417	469	521
Ak .521		Throw	8	11	13	16	19	22	24	27
18x8	19 3/8 x 9 3/8	Cfm	213	283	354	425	496	567	638	708
Ak .708		Throw	9	11	13	16	19	22	25	28
18x10	19 3/8 x 11 3/8	Cfm	273	364	455	546	637	728	819	910
Ak .910		Throw	7	10	12	15	17	20	22	25
18x12	19 3/8 13 3/8	Cfm	331	442	552	663	773	883	994	1104
Ak 1.104		Throw	7	10	12	15	17	20	22	25
20x4	21 3/8 x 5 3/8	Cfm	106	142	177	213	248	283	319	354
Ak .354		Throw	7	10	12	15	17	20	22	25
20x6	21 3/8 x 7 3/8	Cfm	175	233	292	350	408	467	525	583
Ak .583		Throw	8	11	14	16	20	23	25	28
20x8	21 3/8 x 9 3/8	Cfm	238	317	396	475	554	633	713	792
Ak .792		Throw	9	12	15	18	21	23	26	29
20x10	21 3/8 x 11 3/8	Cfm	306	408	510	613	715	817	919	1021
Ak 1.021		Throw	7	10	12	15	17	20	22	25
20x12	21 3/8 x 13 3/8	Cfm	371	494	618	742	865	989	1113	1236
Ak 1.236		Throw	7	10	12	15	17	20	22	25
24x4	25 3/8 x 5 3/8	Cfm	129	172	215	258	301	344	388	431
Ak .431		Throw	7	10	12	15	17	20	22	25
24x6	25 3/8 x 7 3/8	Cfm	190	253	316	379	442	506	569	632
Ak .632		Throw	9	12	15	18	21	23	26	29
24x8	25 3/8 x 9 3/8	Cfm	292	389	486	583	681	778	875	972
Ak .972		Throw	10	13	17	19	23	25	28	31
24x10	25 3/8 x 11 3/8	Cfm	373	497	622	746	870	994	1119	1243
Ak 1.243		Throw	7	10	12	15	17	20	22	25
24x12	25 3/8 x 13 3/8	Cfm	452	603	753	904	1055	1206	1356	1507
Ak 1.507		Throw	7	10	12	15	17	20	22	25

Terminal Velocity of 75 fpm Always specify width by height

Less than or equal to NC 30 ☐

NC 35 ☐

Noise Criteria Chart located on page 96

VHG COMMERCIAL
SIDEWALL/CEILING SUPPLY GRILLES (Vertical)

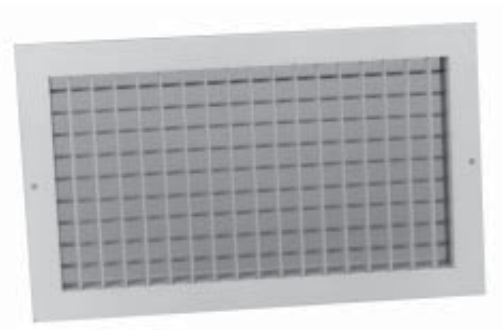

Sidewall/Ceiling
Double Deflection-Steel Frame
Adjustable Aluminum Vertical
Front Blades
White Finish

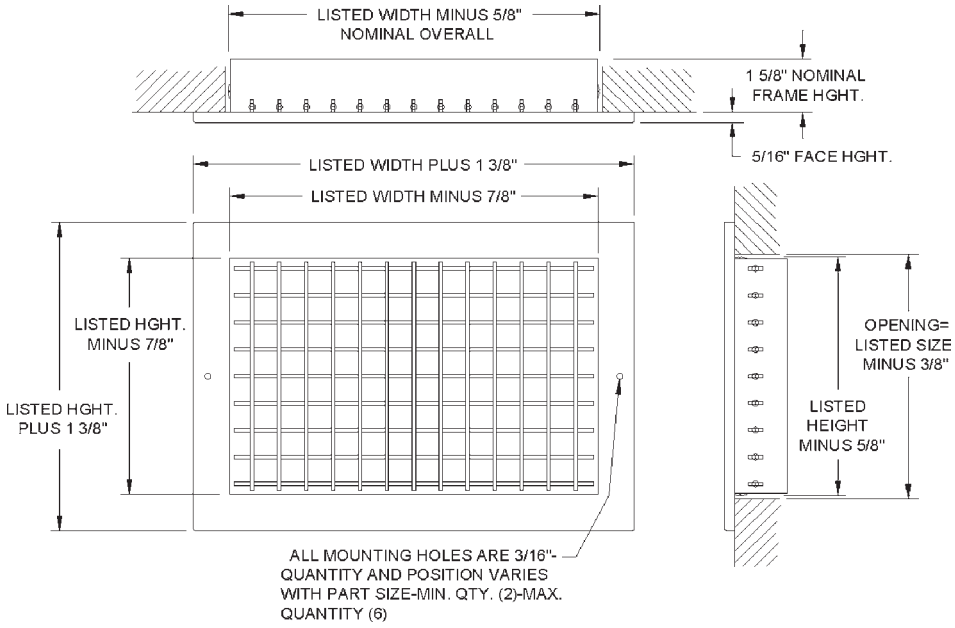

VHG SERIES COMMERCIAL SIDEWALL/CEILING SUPPLY GRILLES

UNIT SIZE	OVERALL SIZE	FACE VELOCITY	300	400	500	600	700	800	900	1000
		PRESSURE LOSS	.006	.010	.016	.022	.031	.040	.050	.062
6x4	7 3/8 x 5 3/8	Cfm	256	33	42	50	58	67	75	83
Ak .083		Throw	3	4	5	7	8	9	10	11
6x6	7 3/8 x 7 3/8	Cfm	50	67	83	100	117	133	150	167
Ak .167		Throw	5	6	7	9	10	12	13	15
8x4	9 3/8 x 5 3/8	Cfm	44	58	73	88	102	117	131	146
Ak .146		Throw	4	5	7	8	9	11	12	13
8x6	9 3/8 x 7 3/8	Cfm	69	92	115	138	160	183	206	229
Ak .230		Throw	5	7	8	10	12	14	15	17
8x8	9 3/8 x 9 3/8	Cfm	96	128	160	192	224	256	288	319
Ak .320		Throw	6	7	9	11	13	15	17	19
10x4	11 3/8 x 5 3/8	Cfm	56	75	94	113	131	150	169	188
Ak .188		Throw	5	6	8	9	11	12	13	14
10x6	11 3/8 x 7 3/8	Cfm	90	119	149	179	209	239	269	299
Ak .297		Throw	6	8	9	11	13	15	17	19
10x8	11 3/8 x 9 3/8	Cfm	123	164	205	246	287	328	369	410
Ak .410		Throw	7	8	10	12	14	16	17	21
10x10	11 3/8 x 11 3/8	Cfm	156	208	260	313	365	417	469	521
Ak .521		Throw	7	9	12	14	16	18	20	23

Engineer's specs continued on page 67

VHG SERIES COMMERCIAL SIDEWALL/CEILING SUPPLY GRILLES (CONT'D)

UNIT SIZE	OVERALL SIZE	FACE VELOCITY	300	400	500	600	700	800	900	1000
		PRESSURE LOSS	.006	.010	.016	.022	.031	.040	.050	.062
12x4	13 3/8 x 5 3/8	Cfm	67	89	111	133	156	178	200	222
Ak .222		Throw	5	7	8	10	12	14	15	17
12x6	13 3/8 x 7 3/8	Cfm	108	144	181	217	253	289	325	361
Ak .361		Throw	7	8	10	12	15	17	19	21
12x8	13 3/8 x 9 3/8	Cfm	148	197	247	296	345	394	444	493
Ak .493		Throw	7	9	11	13	18	17	19	22
12x10	13 3/8 x 11 3/8	Cfm	190	253	316	379	442	506	569	632
Ak .632		Throw	8	11	13	16	19	22	25	28
12x12	13 3/8 x 13 3/8	Cfm	229	306	382	458	535	611	688	764
Ak .764		Throw	9	11	14	17	20	22	25	29
14x4	15 3/8 x 5 3/8	Cfm	79	106	132	158	185	211	238	264
Ak .264		Throw	5	7	9	11	13	15	17	18
14x6	15 3/8 x 7 3/8	Cfm	127	169	212	254	297	339	381	424
Ak .424		Throw	7	8	11	13	16	18	20	23
14x8	15 3/8 x 9 3/8	Cfm	173	231	288	346	403	461	519	576
Ak .576		Throw	8	9	12	14	17	19	21	24
14x10	15 3/8 x 11 3/8	Cfm	221	294	368	442	515	589	663	736
Ak .736		Throw	9	11	13	16	19	22	25	28
14x12	15 3/8 x 13 3/8	Cfm	269	358	448	538	627	717	806	896
Ak .896		Throw	9	12	14	18	22	24	27	31
16x4	17 3/8 x 5 3/8	Cfm	83	111	139	167	194	222	250	278
Ak .278		Throw	7	10	12	15	17	20	22	25
16x6	17 3/8 x 7 3/8	Cfm	135	181	226	271	316	361	406	451
Ak .451		Throw	7	10	12	15	17	20	22	25
16x8	17 3/8 x 9 3/8	Cfm	185	247	309	371	433	494	556	618
Ak .618		Throw	8	10	13	15	18	20	22	25
16x10	17 3/8 x 11 3/8	Cfm	238	317	396	475	554	633	713	792
Ak .792		Throw	7	10	12	15	17	20	22	25
16x12	17 3/8 x 13 3/8	Cfm	288	383	479	575	671	767	863	958
Ak .958		Throw	7	10	12	15	17	20	22	25
18x4	19 3/8 x 5 3/8	Cfm	96	128	160	192	224	256	288	319
Ak .319		Throw	7	10	12	15	17	20	22	25
18x6	19 3/8 x 7 3/8	Cfm	154	206	257	308	360	411	463	514
Ak .514		Throw	8	11	13	16	19	22	24	27
18x8	19 3/8 x 9 3/8	Cfm	213	283	354	425	496	567	638	708
Ak .708		Throw	9	11	13	16	19	22	25	28
18x10	19 3/8 x 11 3/8	Cfm	271	361	451	542	632	722	813	903
Ak .903		Throw	7	10	12	15	17	20	22	25
18x12	19 3/8 x 13 3/8	Cfm	329	439	549	658	768	878	988	1097
Ak 1.097		Throw	7	10	12	15	17	20	22	25
20x4	21 3/8 x 5 3/8	Cfm	108	144	181	217	252	289	325	361
Ak .361		Throw	7	10	12	15	17	20	22	25
20x6	21 3/8 x 7 3/8	Cfm	175	233	292	350	408	467	525	583
Ak .583		Throw	8	11	14	16	20	23	25	28
20x8	21 3/8 x 9 3/8	Cfm	240	319	399	479	559	639	719	799
Ak .799		Throw	9	12	15	18	21	23	26	29
20x10	21 3/8 x 11 3/8	Cfm	306	408	510	613	715	817	919	1021
Ak 1.021		Throw	7	10	12	15	17	20	22	25
20x12	21 3/8 x 13 3/8	Cfm	371	494	618	742	865	989	1113	1236
Ak 1.236		Throw	7	10	12	15	17	20	22	25
24x4	25 3/8 x 5 3/8	Cfm	131	175	219	263	306	350	394	438
Ak .438		Throw	7	10	12	15	17	20	22	25
24x6	25 3/8 x 7 3/8	Cfm	190	253	316	379	442	506	569	632
Ak .632		Throw	9	12	15	18	21	23	26	29
24x8	25 3/8 x 9 3/8	Cfm	292	389	486	583	681	778	875	972
Ak .972		Throw	10	13	17	19	23	25	28	31
24x10	25 3/8 x 11 3/8	Cfm	371	494	618	742	865	989	1113	1236
Ak 1.236		Throw	7	10	12	15	17	20	22	25
24x12	25 3/8 x 13 3/8	Cfm	450	600	750	900	1050	1200	1350	1500
Ak 1.500		Throw	7	10	12	15	17	20	22	25

Terminal Velocity of 75 fpm Always specify width by height

Less than or equal to NC 30

NC 35

Noise Criteria Chart located on page 96

PM SERIES STEEL T-BAR CEILING PLENUMS

PM Has R1 Insulated Fiberglass Blanket
PM6 Has R6 Insulated Fiberglass Blanket
PM w/o I Has No Insulation
Drops Into Standard 24" x 24" "T" Bar Openings
Steel Construction
Deep Back Cavity Provides Excellent Performance Characteristics
Utilizes 5400 Series Snap In Collar
Accepts 3800 Series Damper Inserted into Collar

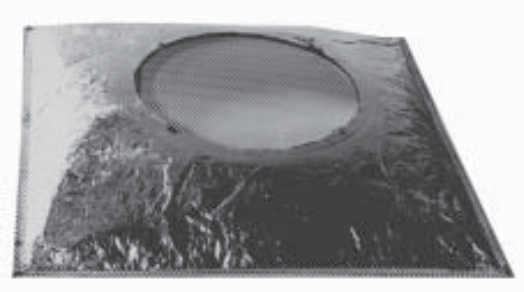

P SERIES MOLDED FIBERGLASS CEILING PLENUMS

P106 Drops into Standard 24" x 24" "T" Bar Openings
Black Inside with Foil Facing
Fiberglass Plenum with R6 Rating
Prescored for 6", 8", 10", 12" and 14" Round Collars
PT106 Available with T-Bar Filter Grille Only

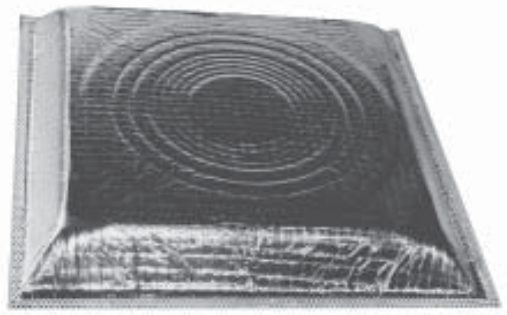

PM6, PT106 AND P106-THESE PLENUMS MEET OR EXCEED RATINGS AND TESTS.
***R6 VALUE *UL 181 AND IMPACT * ASTM E84 FLAME & SMOKE.**

Commercial T-Bar Ceiling Diffusers & Grilles

LIP SERIES LAY IN PANELS

Stamped Steel Construction
White Paint Finish
Available in 24" x 24" and 48" x 24"
Flat Panel
No Holes in Panel

LIP SHOWN WITH #16 SERIES MOUNTED

HVS T-BAR DIFFUSERS
(HIGH VOLUME SERIES)

3 Cone Drop Design
Available with R6 Blanket
Provides High Volume of Air Delivery
360½ Air Diffusion
Formed Steel Back Panel
Removable Core
Fiberglass Insulation with Vapor Barrier Foil to Reduce Condensation
Insulation Blanket Prescored to Accommodate Various Collar Series
HVSA Utilizes Snap-in Collar (5400 Series)
Accepts Butterfly Damper (3800 series) Inserted in the Collar
Damper Adjusted through Diffuser Face to
Allow Proper Air Balancing
Heavy Gauge Steel Plenum
White Finish
Seismic Tabs

HVS06, HVS08, HVS10, HVS12 and **HVS 14** have non-removable/dedicated collars.

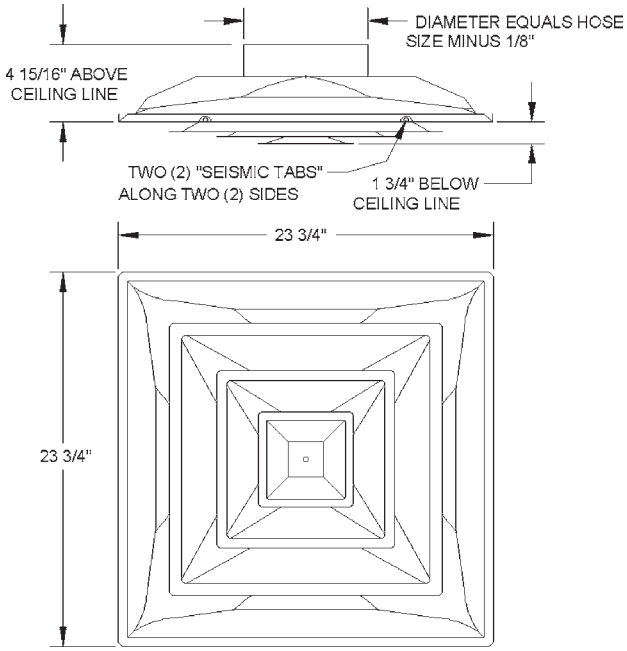

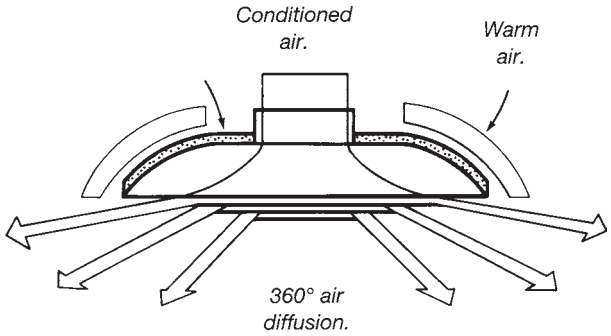

HVS SERIES HIGH VOLUME T-BAR DIFFUSERS

UNIT SIZE	OVERALL SIZE	NECK VELOCITY	400	500	600	700	800	900	1000	1200	1400	1600
6"	23 3/4 x 23 3/4	Cfm	80	100	120	135	155	175	195	235	275	315
An .20		Ps	.008	.012	.017	.021	.028	.035	.043	.063	.086	.112
Ak .78		Nc	<20	<20	<20	<20	<20	<20	20	25	30	35
		Throw	2	3	3	3.5	4	4.5	5	6	7	8
7"	23 3/4 x 23 3/4	Cfm	110	135	160	190	215	240	270	320	375	415
An .27		Ps	.009	.013	.019	.025	.033	.042	.051	.074	.101	.131
Ak .18		Nc	<20	<20	<20	<20	<20	20	25	30	35	40
		Throw	3	4	4.5	5	6	7	8	9	10.5	12.5
8"	23 3/4 x 23 3/4	Cfm	140	175	210	245	280	315	350	420	490	560
An .35		Ps	.010	.015	.022	.029	.038	.049	.060	.086	.117	.150
Ak .92		Nc	<20	<20	<20	<20	20	25	30	35	35	40
		Throw	3.5	4.5	5.5	6.5	7	8	9	10.5	12.5	14.5

Engineer's specs continued on page 70

HVS SERIES HIGH VOLUME T-BAR DIFFUSERS (CONT'D)

UNIT SIZE	OVERALL SIZE	NECK VELOCITY	400	500	600	700	800	900	1000	1200	1400	1600
9"	23 3/4 x 23 3/4	Cfm	180	220	265	310	350	390	440	525	610	700
An.44		Ps	.012	.018	.026	.035	.046	.058	.072	.104	.142	.181
Ak 1.20		Nc	<20	<20	<20	<20	20	25	30	35	40	45
		Throw	4.5	5.5	6.5	8	9.5	10.5	12	14.5	16.5	19
10"	23 3/4 x 23 3/4	Cfm	220	270	325	380	435	490	545	655	765	870
An .54		Ps	.014	.021	.030	.041	.054	.068	.084	.122	.167	.212
Ak 1.20		Nc	<20	<20	<20	20	25	30	35	35	40	45
		Throw	5.5	7	8.5	10	11	12.5	14	17	19.5	22
12"	23 3/4 x 23 3/4	Cfm	315	390	470	550	630	705	785	940	1100	1255
An .78		Ps	.015	.023	.033	.045	.060	.072	.094	.132	.180	.230
Ak 1.65		Nc	<20	<20	20	25	30	35	35	40	45	45
		Throw	6	7.5	9	10.5	12	13.5	15	18	21	24
14"	23 3/4 x 23 3/4	Cfm	430	535	640	750	855	960	1070	1285	1500	1700
An 1.07		Ps	.023	.036	.051	.071	.093	.115	.140	.205	.277	.350
Ak 2.06		Nc	<20	<20	20	25	30	35	40	40	45	45
		Throw	6.5	8	9.5	11.5	13	14.5	16	19	22.5	25

Terminal Velocity of 75 fpm

BHV SERIES
T-BAR DIFFUSERS (HIGH VOLUME SERIES)

Without Insulation
3 Cone Drop Design
Provides High Volume of Air Delivery
360½ Air Diffusion
Formed Steel Back Panel
Removable Core
Accepts Butterfly Damper (3800 Series) Inserted in the Collar
Damper Adjusted through Diffuser Face to Allow Proper Air Balancing
Heavy Gauge Steel Plenum
White Finish
Seismic Tabs

BHV06NI, BHV08NI, BHV10NI, BHV12NI and **BHV14NI** have non-removable/dedicated collars.

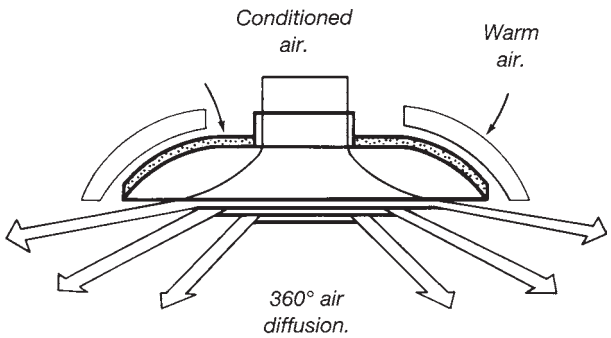

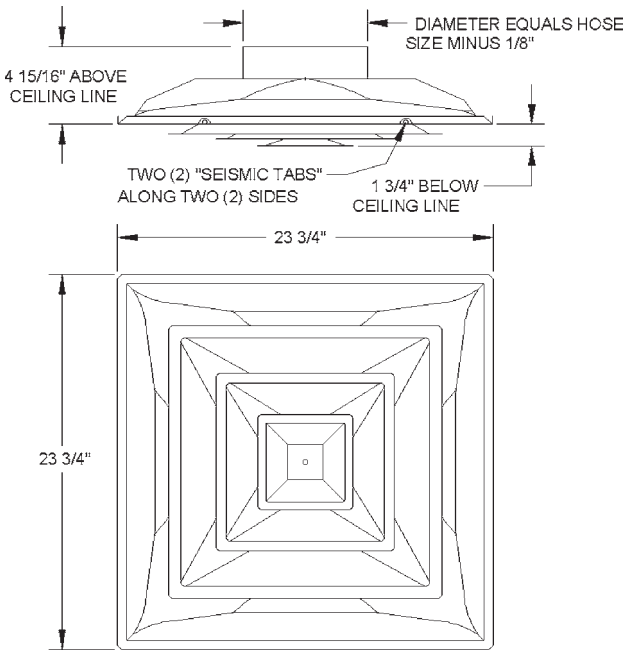

Engineer's specs on page 71

BHV SERIES HIGH VOLUME T-BAR DIFFUSERS

UNIT SIZE	OVERALL SIZE	NECK VELOCITY	400	500	600	700	800	900	1000	1200	1400	1600
6"	23 3/4 x 23 3/4	Cfm	80	100	120	135	155	175	195	235	275	315
An .20		Ps	.008	.012	.017	.021	.028	.035	.043	.063	.086	.112
Ak .78		Nc	<20	<20	<20	<20	<20	<20	20	25	30	35
		Throw	2	3	3	3.5	4	4.5	5	6	7	8
7"	23 3/4x 23 3/4	Cfm	110	135	160	190	215	240	270	320	375	415
An .27		Ps	.009	.013	.019	.025	.033	.042	.051	.074	.101	.131
Ak .85		Nc	<20	<20	<20	<20	<20	20	25	30	35	40
		Throw	3	4	4.5	5	6	7	8	9	10.5	12.5
8"	23 3/4 x 23 3/4	Cfm	140	175	210	245	280	315	350	720	490	560
An .35		Ps	.010	.015	.022	.029	.038	.049	.060	.086	.117	.150
Ak .92		Nc	<20	<20	<20	<20	20	25	30	35	35	40
		Throw	3.5	4.5	5.5	6.5	7	8	9	10.5	12.5	14.5
9"	23 3/4x 23 3/4	Cfm	180	220	265	310	350	390	440	525	610	700
An .44		Ps	.012	.018	.026	.035	.046	.058	.072	.104	.145	.181
Ak 1.20		Nc	<20	<20	<20	20	25	30	35	40	42	45
		Throw	4.5	5.5	6.5	8	9.5	10.5	12	14.5	16.5	19
10"	23 3/4 x 23 3/4	Cfm	220	270	325	380	435	490	545	655	765	870
An .54		Ps	.014	.021	.030	.041	.054	.068	.084	.122	.167	.212
Ak 1.65		Nc	<20	<20	<20	20	25	30	35	35	40	45
		Throw	5.5	7	8.5	10	11	12.5	14	17	19.5	22
12"	23 3/4 x 23 3/4	Cfm	315	390	470	550	630	705	785	940	1100	1255
An .78		Ps	.015	.023	.033	.045	.060	.072	.094	.132	.180	.230
Ak 1.65		Nc	<20	<20	20	25	30	35	35	40	45	>45
		Throw	6	7.5	9	10.5	12	13.5	15	18	21	24
14"	23 3/4 x 23 3/4	Cfm	430	535	640	750	855	960	1070	1285	1500	1700
An 1.07		Ps	.023	.036	.051	.071	.093	.115	.140	.205	.277	.350
Ak 2.06		Nc	<20	<20	20	25	30	35	40	40	45	>45
		Throw	6.5	8	9.5	11.5	13	14.5	16	19	22.5	25

Terminal Velocity of 75 fpm

FPD FIXED PATTERN HIGH VOLUME DIFFUSERS (HIGH VOLUME SERIES)

2 Cone Drop Design
Provides High Volume of Air Delivery
360% Air Diffusion
Formed Steel Back Panel
Removable Core
Available with Fiberglass Insulation with Vapor Barrier Foil
to Reduce Condensation
FPDA Utilizes Snap-in Collar (5400 Series)
Accepts Butterfly Damper (3800 Series) Inserted in the Collar
Damper Adjusted through Diffuser Face
to Allow Proper Air Balancing
White Finish
Seismic Tabs

FPD06, FPD08, FPD10, FPD12 and **FPD14**
have non-removable/dedicated collars.

Engineer's specs on page 72

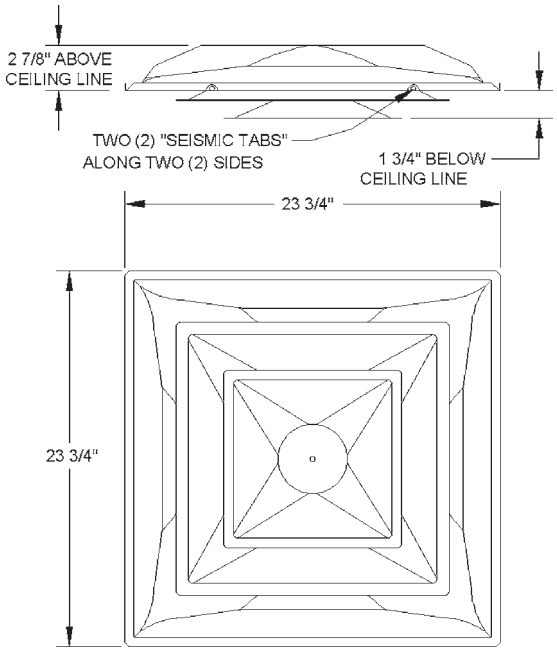

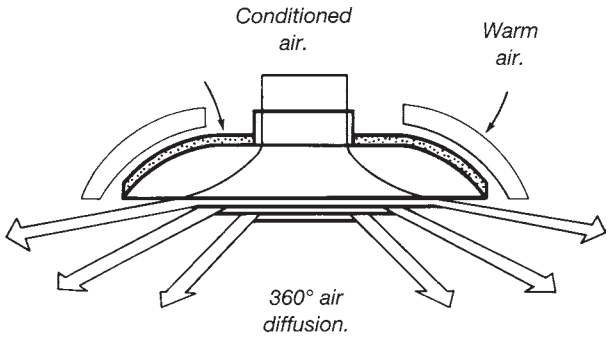

FPD SERIES FIXED PATTERN HIGH VOLUME DIFFUSERS

UNIT SIZE	OVERALL SIZE	NECK VELOCITY	400	500	600	700	800	900	1000	1200	1400	1600
6"	23 3/4 X 23 3/4	Cfm	80	100	120	135	155	175	195	235	275	315
An .20		Ps	.008	.012	.017	.021	.028	.035	.043	.063	.086	.112
Ak .78		Nc	<20	<20	<20	<20	<20	<20	20	25	30	35
		Throw	2	3	3	3.5	4	4.5	5	6	7	8
7"	23 3/4 X 23 3/4	Cfm	110	135	160	190	215	240	270	320	375	415
An .27		Ps	.009	.013	.019	.025	.033	.042	.051	.074	.101	.131
Ak .18		Nc	<20	<20	<20	<20	<20	20	25	30	35	40
		Throw	3	4	4.5	5	6	7	8	9	10.5	12.5
8"	23 3/4 X 23 3/4	Cfm	140	175	210	245	280	315	350	420	490	560
An .35		Ps	.010	.015	.022	.029	.038	.049	.060	.086	.117	.150
Ak .92		Nc	<20	<20	<20	<20	20	25	30	35	35	40
		Throw	3.5	4.5	5.5	6.5	7	8	9	10.5	12.5	14.5
9"	23 3/4 X 23 3/4	Cfm	180	220	265	310	350	390	440	525	610	700
An.44		Ps	.012	.018	.026	.035	.046	.058	.072	.104	.142	.181
Ak 1.20		Nc	<20	<20	<20	<20	20	25	30	35	40	45
		Throw	4.5	5.5	6.5	8	9.5	10.5	12	14.5	16.5	19
10"	23 3/4 X 23 3/4	Cfm	220	270	325	380	435	490	545	655	765	870
An .54		Ps	.014	.021	.030	.041	.054	.068	.084	.122	.167	.212
Ak 1.20		Nc	<20	<20	<20	20	25	30	35	35	40	45
		Throw	5.5	7	8.5	10	11	12.5	14	17	19.5	22
12"	23 3/4 X 23 3/4	Cfm	315	390	470	550	630	705	785	940	1100	1255
An .78		Ps	.015	.023	.033	.045	.060	.072	.094	.132	.180	.230
Ak 1.65		Nc	<20	<20	20	25	30	35	35	40	45	45
		Throw	6	7.5	9	10.5	12	13.5	15	18	21	24
14"	23 3/4 X 23 3/4	Cfm	430	535	640	750	855	960	1070	1285	1500	1700
An 1.07		Ps	.023	.036	.051	.071	.093	.115	.140	.205	.277	.350
Ak 2.06		Nc	<20	<20	20	25	30	35	40	40	45	45
		Throw	6.5	8	9.5	11.5	13	14.5	16	19	22.5	25

Terminal Velocity of 75 fpm

PDS/PDS6

(PERFORATED DIFFUSER SUPPLY)

FOR STANDARD "T" BAR OPENING
(FORMED STEEL INSULATED PLENUM)

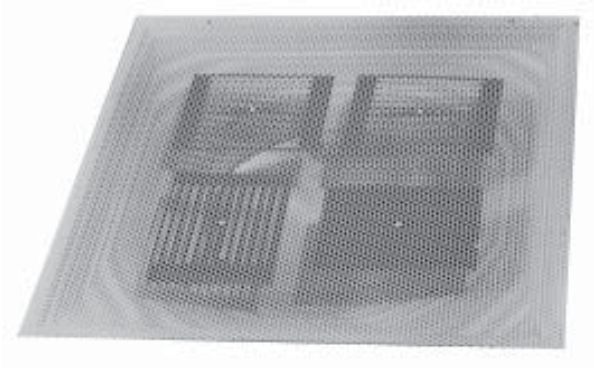

PDS6 Has R6 Insulated Blanket
Perforated Steel Face
Perforated Return Air Grille Provides over 50% Net Free Area
Face Adjustable Deflectors Optional (pictured)
Formed Steel Pre-coated Back Plenum
Fiberglass Insulation with Vapor Barrier Foil
to Reduce Condensation
Insulation Blanket Prescored to Accommodate
Various Collar Sizes
PDSA/PDSA6 Utilizes Snap-in Collar (5400 Series)
Accepts Butterfly Damper (3800 Series) Inserted
in the 5400 Series Collar
Damper Adjusted through Diffuser Face
to Allow Proper Air Balancing
White Finish
Seismic Tabs

PDS06, PDS08, PDS10, PDS12 and **PDS14**
have non-removable/dedicated collars.

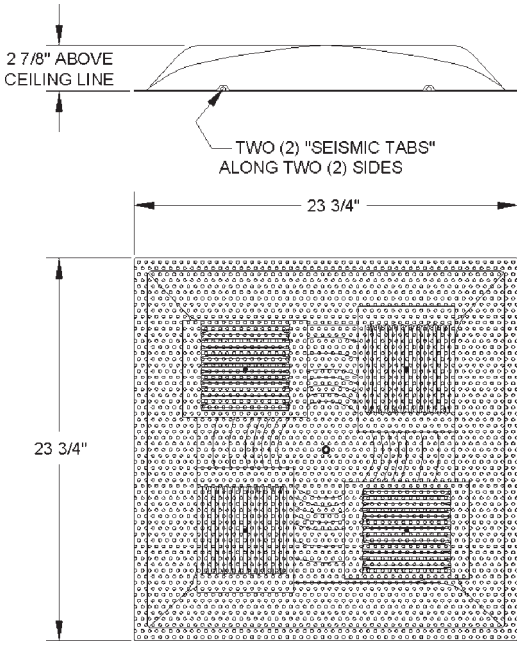

PDS4A SERIES

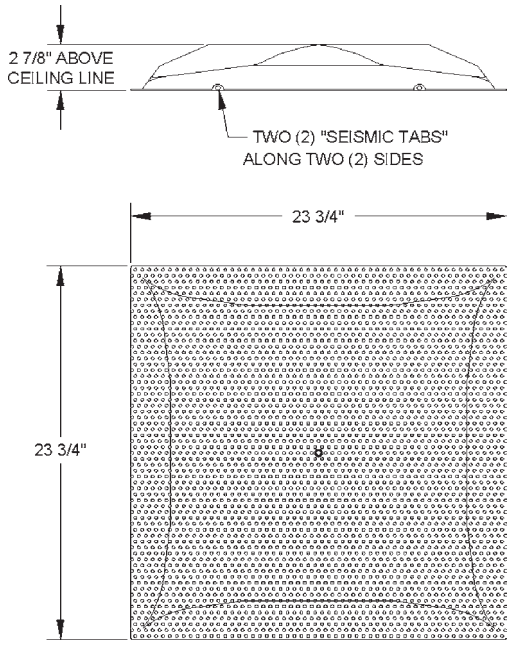

PDSA SERIES

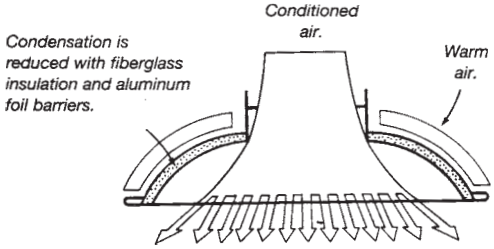

Engineer's specs on page 74

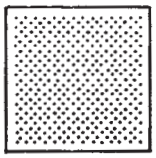

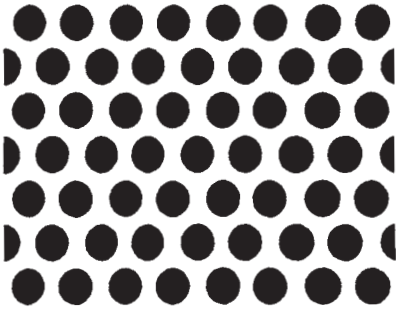

PERFORATED SERIES
PATTERN
ACTUAL SIZE

PDS/PDS6 SERIES PERFORATED T-BAR DIFFUSERS

UNIT SIZE	OVERALL SIZE	NECK VELOCITY	300	400	500	600	700	800	900	1000
2'x2' 6" Duct An .20	23 3/4 X 23 3/4	Cfm	59	79	98	118	137	157	177	196
		Ps	.006	.009	.013	.017	.024	.031	.039	.047
		Nc	<20	<20	<20	22	26	30	35	40
		Throw	4	5	6	7	9	10	12	13
2'x2' 7" Duct An .27	23 3/4 X 23 3/4	Cfm	80	107	134	160	187	214	241	267
		Ps	.006	.010	.014	.019	.027	.034	.043	.053
		Nc	<20	<20	20	24	28	34	38	42
		Throw	5	6	7	9	11	12	14	15
2'x2' 8" Duct An .35	23 3/4 X 23 3/4	Cfm	105	140	175	209	244	279	314	349
		Ps	.006	.010	.015	.021	.031	.038	.049	.059
		Nc	<20	<20	21	26	31	39	42	>45
		Throw	6	7	9	11	12	14	15	17
2'x2' 9" Duct An .44	23 3/4 X 23 3/4	Cfm	133	177	221	265	309	353	398	442
		Ps	.007	.011	.017	.024	.033	.043	.054	.066
		Nc	<20	<20	21	26	32	39	43	>45
		Throw	7	8	10	13	15	17	19	22
2'x2' 10" Duct An .54	23 3/4 X 23 3/4	Cfm	164	218	273	327	382	436	491	545
		Ps	.008	.012	.019	.027	.037	.048	.061	.075
		Nc	<20	<20	21	26	34	40	43	>45
		Throw	8	10	13	16	18	21	24	26
2'x2' 12" Duct An .78	23 3/4 X 23 3/4	Cfm	236	314	393	471	550	628	707	785
		Ps	.008	.014	.022	.033	.045	.061	.075	.093
		Nc	<20	20	25	33	40	44	>45	>45
		Throw	10	12	16	19	21	24	27	29
2'x2' 14" Duct An 1.07	23 3/4 X 23 3/4	Cfm	321	428	535	641	748	855	962	1069
		Ps	.009	.017	.027	.040	.055	.075	.093	.115
		Nc	<20	20	25	30	38	45	>45	>45
		Throw	11	14	19	22	25	28	31	34
2'x2' 16" Duct An 1.40	23 3/4 X 23 3/4	Cfm	419	559	698	838	977	1117	1257	1396
		Ps	.010	.019	.032	.049	.067	.092	.113	.141
		Nc	<20	<20	24	29	36	42	>45	>45
		Throw	12	17	21	25	29	34	36	40
2'x2' 18" Duct An 1.77	23 3/4 X 23 3/4	Cfm	531	707	884	1060	1238	1413	1591	1766
		Ps	.011	.021	.034	.053	.073	.101	.123	.154
		Nc	<20	<20	23	28	34	40	>45	>45
		Throw	12	17	21	25	29	34	36	40
2'x2' 20" Duct An 2.18	23 3/4 X 23 3/4	Cfm	601	800	1001	1199	1401	1599	1800	1999
		Ps	.012	.022	.035	.055	.076	.105	.128	.160
		Nc	<20	<20	22	27	32	38	45	>45
		Throw	14	19	23	28	32	38	40	44
2'x2' Face Only (Used as return) Ak 2.20		Cfm	581	775	969	1162	1358	1550	1744	1938

Terminal Velocity of 75 fpm

T SERIES T-BAR FILTER GRILLES

TP - Perforated Face
TL2 - Louvered Face 1/2" Spaced Fins
TL3 - Louvered Face 1/3" Spaced Fins
Steel Construction
Fits 24" x 24" "T" Bar
TP106, TL2106, TL3106 Available with R6 Plenum
Flush Face
Hidden Latch & Hinge
Removable Hinged Face
Uses Standard 20" x 20" x 1" Filters (Not Included)
Face Can Be Installed in Any Direction

TP SERIES SHOWN

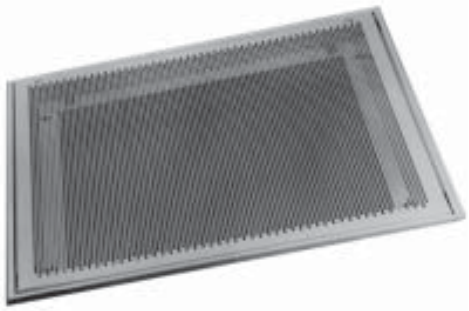

Size 20" x 20"; Overall Size 23 3/4 x 23/4"
221" Sq. In. Free Air
White Finish
Thumb Latch for Easy Opening

Engineer's specs on page 75

TL "T" BAR LOUVERED FILTER GRILLE

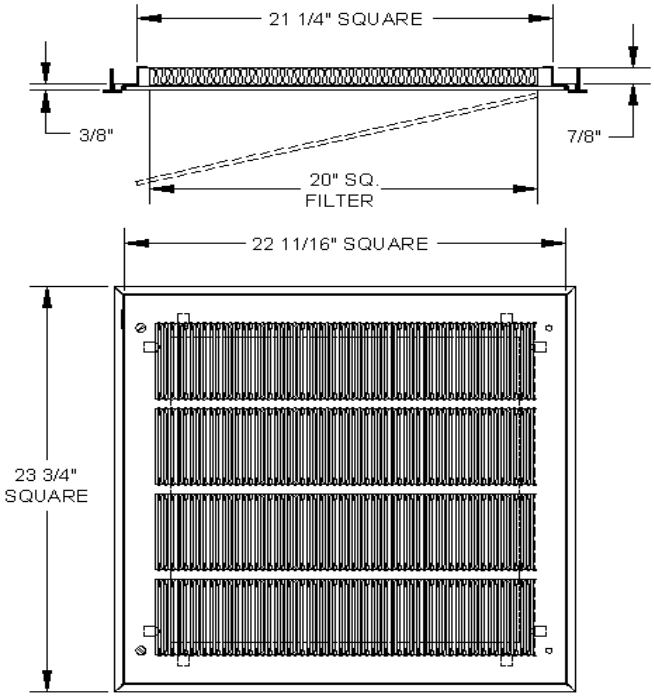

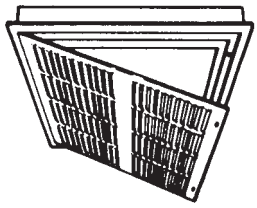

TP "T" BAR PERFORATED FILTER GRILLE

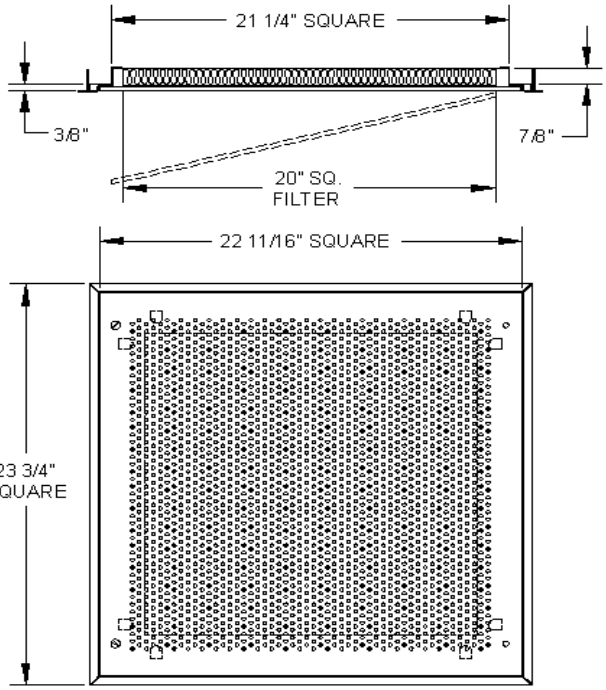

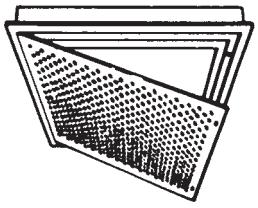

TP SERIES FILTER GRILLES

UNIT SIZE	OVERALL SIZE	NECK VELOCITY	300	400	500	600	700	800	900	1000
2'x2'	23 3/4 x 23 3/4	Cfm	469	625	781	937	1093	1250	1406	1562
Ak 1.562		Ps	.028	.050	.078	.113	.152	.200	.240	.276

TL2 SERIES FILTER GRILLES

UNIT SIZE	OVERALL SIZE	NECK VELOCITY	300	400	500	600	700	800	900	1000
2'x2'	23 3/4 x 23 3/4	Cfm	614	818	1023	1228	1432	1637	1841	2046
Ak 2.046		Ps	.017	.030	.047	.067	.090	.120	.160	.200

TL3 SERIES FILTER GRILLES

UNIT SIZE	OVERALL SIZE	NECK VELOCITY	300	400	500	600	700	800	900	1000
2'x2'	23 3/4 x 23 3/4	Cfm	620	827	1034	1241	1447	1654	1861	2068
Ak 1.912		Ps	.015	.030	.043	.062	.084	.120	.140	.170

6500 T-BAR SERIES
PERFORATED CEILING DIFFUSERS

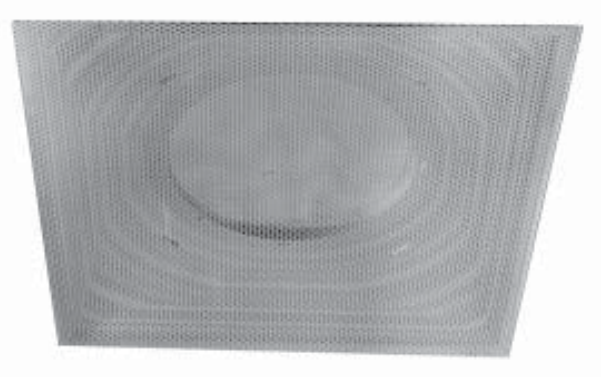

Available with R6 Blanket
Perforated Steel Face
Return Air application
Formed Steel Precoated Back Plenum Uninsulated
6500A Accepts Unique Snap-in Collar (5400 Series)
Accepts 3800 Series Damper Inserted into the Collar
Damper Adjusted through Diffuser Face to Allow Proper Air Balance
6506, 6508, 6510, 6512 and 6514
Have Non-removable/Dedicated Collars
Available with Insulation (Specify)
Seismic Tabs
White Finish

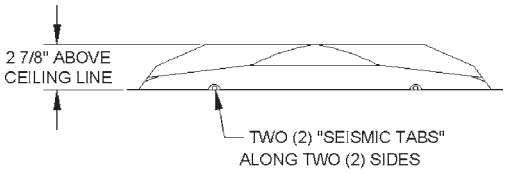

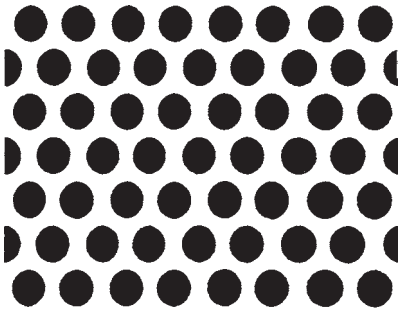

PERFORATED SERIES PATTERN

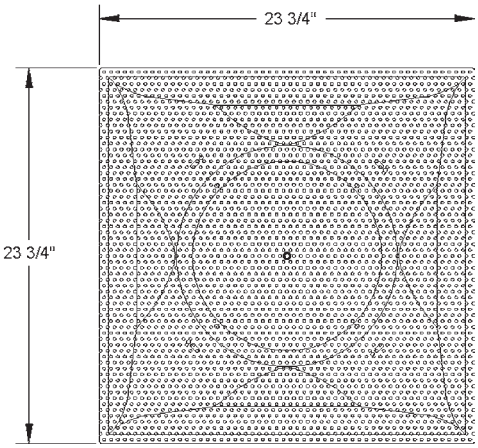

6500 SERIES PERFORATED T-BAR CEILING DIFFUSERS

UNIT SIZE	OVERALL SIZE	NECK VELOCITY	300	400	500	600	700	800	900	1000
2'x2' 6" Duct An .20	23 3/4 x 23 3/4	Cfm	60	80	100	120	140	160	180	200
		Ps	.008	.011	.017	.024	.032	.042	.054	.066
		Nc	<20	<20	<20	22	26	30	35	40
		Throw	4	5	6	7	9	10	12	13
2'x2' 7" Duct An .27	23 3/4 x 23 3/4	Cfm	81	108	135	162	189	216	243	270
		Ps	.008	.011	.017	.024	.032	.042	.054	.067
		Nc	<20	<20	21	24	28	33	38	44
		Throw	5	6	7	9	11	12	14	15
2'x2' 8" Duct" An .35	23 3/4 x 23 3/4	Cfm	105	140	175	210	245	280	315	350
		Ps	.008	.011	.017	.024	.033	.043	.054	.067
		Nc	<20	<20	23	26	31	39	45	45
		Throw	6	7	9	11	12	14	15	17

Engineer's specs continued on page 77

6500 SERIES PERFORATED T-BAR CEILING DIFFUSERS (CONT'D)

UNIT SIZE	OVERALL SIZE	NECK VELOCITY	300	400	500	600	700	800	900	1000
2'x2' 9" Duct An .44	23 3/4 x 23 3/4	Cfm	132	176	220	264	308	352	396	440
		Ps	.008	.011	.017	.024	.033	.043	.055	.068
		Nc	<20	<20	22	25	34	43	>45	>45
		Throw	7	8	10	13	15	17	19	22
2'x2' 10" Duct An .55	23 3/4 x 23 3/4	Cfm	165	220	275	330	385	440	495	550
		Ps	.008	.012	.017	.024	.034	.043	.056	.068
		Nc	<20	<20	21	26	34	40	42	>45
		Throw	8	10	13	16	18	21	24	26
2'x2' 12" Duct An .79	23 3/4 x 23 3/4	Cfm	237	316	395	474	553	632	711	790
		Ps	.009	.016	.026	.037	.050	.065	.080	.100
		Nc	<20	20	25	33	40	45	>45	>45
		Throw	10	12	16	19	21	24	27	29
2'x2' 14"Duct An 1.07	23 3/4 x 23 3/4	Cfm	321	428	535	642	749	856	963	1070
		Ps	.009	.016	.026	.037	.050	.065	.083	.125
		Nc	<20	20	25	30	38	44	>45	>45
		Throw	11	14	19	22	25	28	31	34
2'x2' 16" Duct An 1.40	23 3/4 x 23 3/4	Cfm	420	560	700	840	980	1120	1260	1400
		Ps	.010	.019	.032	.049	.067	.092	.113	.140
		Nc	<20	<20	24	29	36	42	>45	>45
		Throw	12	17	21	25	29	34	36	40
2'x2' 18" Duct An 1.77	23 3/4 x 23 3/4	Cfm	531	708	885	1062	1239	1416	1593	1770
		Ps	.012	.020	.038	.061	.083	.119	.143	.155
		Nc	<20	<20	23	28	34	40	>45	>45
		Throw	12	17	21	25	29	34	36	40
2'x2' 20" Duct An 2.18	23 3/4 x 23 3/4	Cfm	654	872	1090	1308	1526	1744	1962	2188
		Ps	.014	.021	.043	.073	.101	.146	.173	.170
		Nc	<20	<20	22	27	32	38	45	>45
		Throw	14	19	23	28	32	38	40	44
2'x2' Face Only (Used as return) Ak 1.94		Throw	12	17	21	25	29	34	36	40

Terminal Velocity of 75 fpm

6800 T-BAR SERIES
PERFORATED CEILING DIFFUSERS

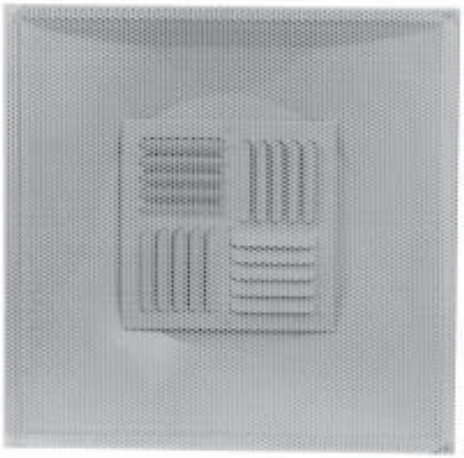

Available with R6 Basket
Perforated Steel Face
"Non-adjustable" Stamped Curved Blade Diffuser Mounted Inside
Formed Steel Precoated Back Plenum Uninsulated
6800A Accepts Unique Snap-in Collar (5400 Series)
Accepts 3800 Series Damper Inserted into Collar
6806, 6808, 6810, 6812 and 6814
Have Non-removable/Dedicated Collars
Available with Insulation (Specify)
Seismic Tabs
White Finish

Engineer's specs on page 78

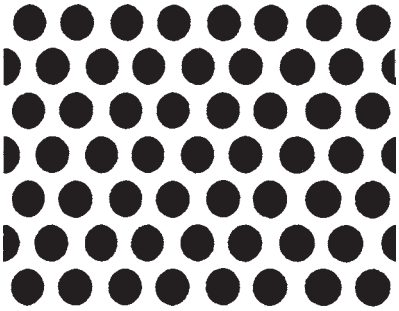

PERFORATED SERIES PATTERN

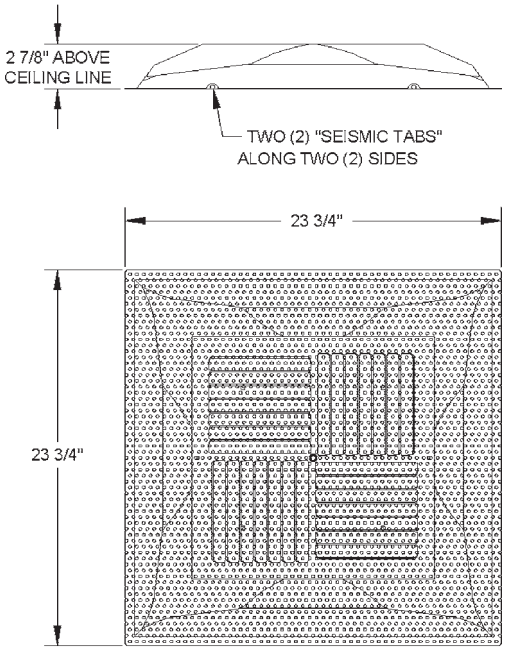

6800 SERIES PERFORATED T-BAR CEILING DIFFUSERS

UNIT SIZE	OVERALL SIZE	NECK VELOCITY	300	400	500	600	700	800	900	1000
2'x2' 6" Duct An .20	23 3/4 x 23 3/4	Cfm	60	80	100	120	140	160	180	200
		Ps	<.01	.01	.02	.03	.04	.05	.06	.08
		Nc	<20	<20	<20	<20	21	24	28	32
		Throw	4	5	6	7	9	10	12	13
2'x2' 7" Duct An .27	23 3/4 x 23 3/4	Cfm	81	108	135	162	189	216	243	270
		Ps	<.01	.01	.02	.03	.04	.05	.06	.08
		Nc	<20	<20	21	24	28	33	38	44
		Throw	5	6	7	9	11	12	14	15
2'x2' 8" Duct An .35	23 3/4 x 23 3/4	Cfm	105	140	175	210	245	280	315	350
		Ps	<.01	.01	.02	.03	.04	.06	.07	.09
		Nc	<20	<20	23	26	31	39	45	45
		Throw	6	7	9	11	12	14	15	17
2'x2' 9" Duct An .44	23 3/4 x 23 3/4	Cfm	132	176	220	264	308	352	396	440
		Ps	.01	.01	.02	.03	.05	.06	.08	.10
		Nc	<20	<20	22	25	34	43	>45	>45
		Throw	7	8	10	13	15	17	19	22
2'x2' 10" Duct An .55	23 3/4 x 23 3/4	Cfm	165	220	275	330	385	440	495	550
		Ps	.01	.02	.03	.04	.06	.07	.09	.11
		Nc	<20	<20	21	26	34	40	42	>45
		Throw	8	10	13	16	18	21	24	26
2'x2' 12" Duct An .79	23 3/4 x 23 3/4	Cfm	237	316	395	474	553	632	711	790
		Ps	.01	.02	.03	.04	.06	.08	.10	.12
		Nc	<20	20	25	33	40	45	>45	>45
		Throw	10	12	16	19	21	24	27	29
2'x2' 14" Duct An 1.07	23 3/4 x 23 3/4	Cfm	321	428	535	642	749	856	963	1070
		Ps	.01	.02	.03	.05	.06	.08	.11	.13
		Nc	<20	20	25	30	38	44	>45	>45
		Throw	11	14	19	22	25	28	31	34
2'x2' 16" Duct An 1.40	23 3/4 x 23 3/4	Cfm	420	560	700	840	980	1120	1260	1400
		Ps	.02	.03	.04	.06	.08	.10	.13	.17
		Nc	<20	<20	24	29	36	42	>45	>45
		Throw	12	17	21	25	29	34	36	40
2'x2' 18" Duct An 1.77	23 3/4 x 23 3/4	Cfm	531	708	885	1062	1239	1416	1593	1770
		Ps	.02	.03	.05	.07	.09	.12	.16	.21
		Nc	<20	<20	23	28	34	40	>45	>45
		Throw	13	18	22	26	31	36	38	42
2'x2' 20" Duct An 2.18	23 3/4 x 23 3/4	Cfm	654	872	1090	1308	1526	1744	1962	2188
		Ps	.02	.03	.05	.07	.10	.13	.17	.22
		Nc	<20	<20	22	27	32	38	45	>45
		Throw	14	19	23	28	32	38	40	44
2'x2' Face Only (Used as return) Ak 1.94		Cfm	582	776	970	1164	1358	1552	1746	1940

Terminal Velocity of 75 fpm

CS SERIES PERFORATED
T-BAR CEILING DIFFUSERS

Steel Construction
R6 Molded Fiberglass Back Panel
Self-Insulated to Absorb Sound
Bonded Foil Vapor Barrier Minimizes Condensation
Deep Back Cavity Provides Excellent
Performance Characteristics
Prescored Back—Accepts 1" Spin In or Top Collar,
Allowing Neck Size to be Determined
at Time of Installation
Damper Adjusted through Diffuser Face
to Allow Proper Air Balancing
White Finish
Seismic Tabs

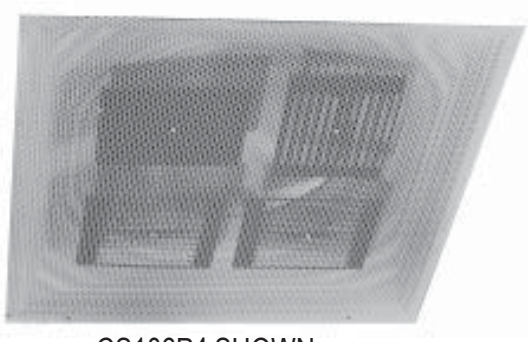

CS106P4 SHOWN

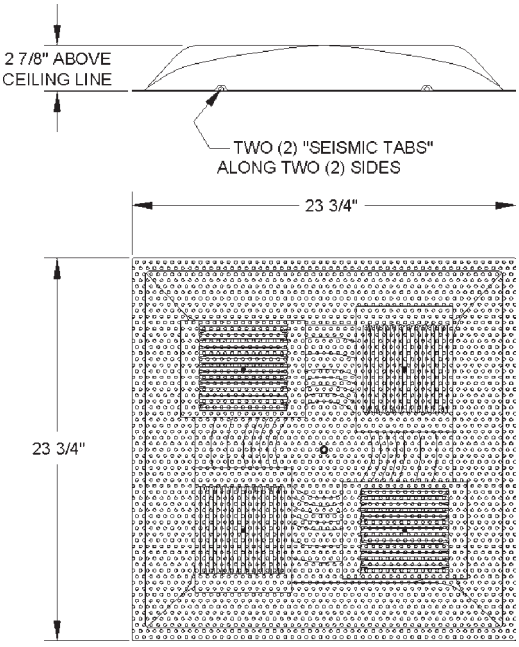

CS106P4 T-BAR DIFFUSER WITH DEFLECTORS

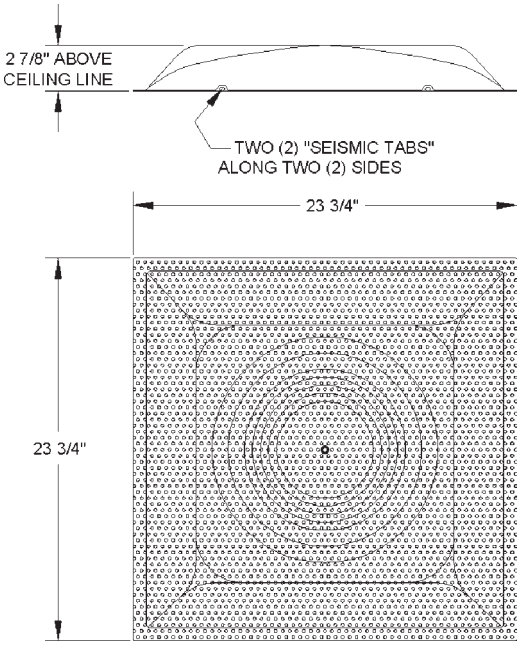

CS106P T-BAR DIFFUSER WITHOUT DEFLECTORS

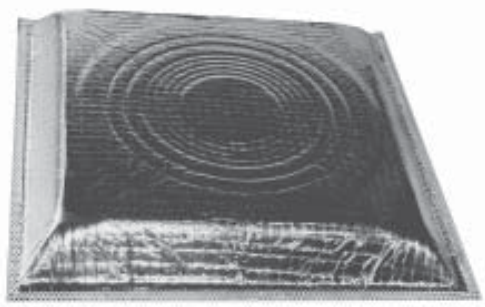

P106-MOLDED FIBERGLASS PLENUM

Engineer's specs on page 80

CS SERIES PERFORATED T-BAR CEILING DIFFUSERS

UNIT SIZE	OVERALL SIZE	NECK VELOCITY	300	400	500	600	700	800	900	1000
2'x2'	23 3/4 x 23 3/4	Cfm	59	79	98	118	137	157	177	196
6" Duct		Ps	.006	.009	.013	.017	.024	.031	.039	.047
An .20		Nc	<20	<20	<20	22	26	30	35	40
		Throw	4	5	6	7	9	10	12	13
2'x2'	23 3/4 x 23 3/4	Cfm	80	107	134	160	187	214	241	267
7" Duct		Ps	.006	.010	.014	.019	.027	.034	.043	.053
An .27		Nc	<20	<20	20	24	28	34	38	42
		Throw	5	6	7	9	11	12	14	15
2'x2'	23 3/4 x 23 3/4	Cfm	105	140	175	209	244	279	314	349
8" Duct		Ps	.006	.010	.015	.021	.031	.038	.049	.059
An .35		Nc	<20	<20	21	26	31	39	42	>45
		Throw	6	7	9	11	12	14	15	17
2'x2'	23 3/4 x 23 3/4	Cfm	133	177	221	265	309	353	398	442
9" Duct		Ps	.007	.011	.017	.024	.033	.043	.054	.066
An .44		Nc	<20	<20	21	26	32	39	43	>45
		Throw	7	8	10	13	15	17	19	22
2'x2'	23 3/4 x 23 3/4	Cfm	164	218	273	327	382	436	491	545
10" Duct		Ps	.008	.012	.019	.027	.037	.048	.061	.075
An .54		Nc	<20	<20	21	26	34	40	43	>45
		Throw	8	10	13	16	18	21	24	26
2'x2'	23 3/4 x 23 3/4	Cfm	236	314	393	471	550	628	707	785
12" Duct		Ps	.008	.014	.022	.033	.045	.061	.075	.093
An .78		Nc	<20	20	25	33	40	44	>45	>45
		Throw	10	12	16	19	21	24	27	29
2'x2'	23 3/4 x 23 3/4	Cfm	321	428	535	641	748	855	962	1069
14" Duct		Ps	.009	.017	.027	.040	.055	.075	.093	.115
An 1.07		Nc	<20	20	25	30	38	45	>45	>45
		Throw	11	14	19	22	25	28	31	34
2'x2'	23 3/4 x 23 3/4	Cfm	419	559	698	838	977	1117	1257	1396
16" Duct		Ps	.010	.019	.032	.049	.067	.092	.113	.141
An 1.40		Nc	<20	<20	24	29	36	42	>45	>45
		Throw	12	17	21	25	29	34	36	40
2'x2'	23 3/4 x 23 3/4	Cfm	531	707	884	1060	1238	1413	1591	1766
18" Duct		Ps	.011	.021	.034	.053	.073	.101	.123	.154
An 1.77		Nc	<20	<20	23	28	34	40	>45	>45
		Throw	12	17	21	25	29	34	36	40
2'x2'	23 3/4 x 23 3/4	Cfm	601	800	1001	1199	1401	1599	1800	1999
20" Duct		Ps	.012	.022	.035	.055	.076	.105	.128	.160
An 2.18		Nc	<20	<20	22	27	32	38	45	>45
		Throw	14	19	23	28	32	38	40	44
2'x2' Face Only (Used as return) Ak 2.20		Cfm	581	775	969	1162	1358	1550	1744	1938

Terminal Velocity of 75 fpm

Noise Criteria Chart located on page 96

Proudly Made in the U.S.A.

RDF SERIES REMOVABLE DROP FACE PERFORATED DIFFUSERS

Removable Drop Face with 3/8" Drop
Perforated Steel Face
Non-Insulated
Available in Supply With 4-Way Deflectors
Available in Return Without 4 Way Deflectors
Formed Steel Plenum
RDFA and RDF4A Utilizes
5400 Series Collar 6"-12"
Accepts 3800 Series Damper
Inserted into Collar
Removable Face for Easy Cleaning
& Access to Deflectors
White Finish

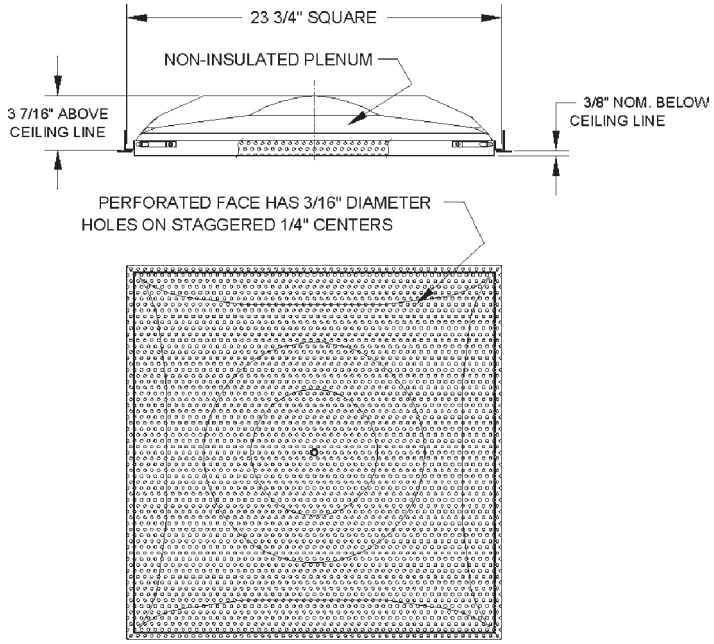

RDF SERIES REMOVABLE DROP FACE PERFORATED DIFFUSERS

UNIT SIZE	OVERALL SIZE	NECK VELOCITY	300	400	500	600	700	800	900	1000
2'x2' 6" Duct An .20	23 3/4 x 23 3/4	Cfm	60	80	100	120	140	160	180	200
		Ps	.005	.009	.015	.021	.027	.037	.047	.058
		Nc	<20	<20	<20	<20	21	26	32	34
		Throw	4	5	6	7	9	10	12	13
2'x2' 7" Duct An .27	23 3/4 x 23 3/4	Cfm	81	108	135	162	189	216	243	270
		Ps	.006	.010	.016	.022	.032	.043	.053	.066
		Nc	<20	<20	<20	<20	21	27	32	35
		Throw	5	6	7	9	11	12	14	15
2'x2' 8" Duct An .35	23 3/4 x 23 3/4	Cfm	105	140	175	209	244	279	314	349
		Ps	.007	.012	.019	.027	.037	.049	.060	.074
		Nc	<20	<20	<20	<20	22	28	33	36
		Throw	6	7	9	11	12	14	15	17
2'x2' 9" Duct An .44	23 3/4 x 23 3/4	Cfm	133	177	221	265	309	353	398	442
		Ps	.007	.013	.021	.030	.042	.054	.068	.084
		Nc	<20	<20	<20	21	24	30	34	37
		Throw	7	8	10	13	15	17	19	22
2'x2' 10" Duct An .54	23 3/4 x 23 3/4	Cfm	164	218	273	327	382	436	491	545
		Ps	.008	.015	.023	.033	.046	.060	.076	.093
		Nc	<20	<20	<20	22	27	32	36	39
		Throw	8	10	13	16	18	21	24	26

Engineer's specs continued on page 82

RDF SERIES REMOVABLE DROP FACE PERFORATED DIFFUSERS (CONT'D)

UNIT SIZE	OVERALL SIZE	NECK VELOCITY	300	400	500	600	700	800	900	1000
2'x2' 12" Duct An .78	23 3/4 x 23 3/4	Cfm	236	314	393	471	550	628	707	785
		Ps	.010	.018	.027	.039	.053	.070	.088	.110
		Nc	<20	<20	<20	23	27	35	38	41
		Throw	10	12	16	19	21	24	27	29
2'x2' 14" Duct An 1.07	23 3/4 x 23 3/4	Cfm	321	428	535	641	748	855	962	1069
		Ps	.011	.020	.031	.045	.060	.080	.105	.125
		Nc	<20	<20	<20	25	31	34	39	43
		Throw	11	14	19	22	25	28	31	34
2'x2' 16" Duct An 1.40	23 3/4 x 23 3/4	Cfm	420	560	700	840	980	1120	1260	1400
		Ps	.018	.031	.048	.070	.092	.120	.153	.195
		Nc	<20	<20	24	29	36	42	>45	>45
		Throw	12	17	21	25	29	34	36	40
2'x2' 18" Duct An 1.77	23 3/4 x 23 3/4	Cfm	531	708	885	1062	1239	1416	1593	1770
		Ps	.018	.031	.049	.070	.094	.125	.166	.220
		Nc	<20	<20	23	28	34	40	>45	>45
		Throw	13	18	22	26	31	36	38	42
2'x2' 20" Duct An 2.18	23 3/4 x 23 3/4	Cfm	654	872	1090	1308	1526	1744	1962	2180
		Ps	.019	.031	.049	.071	.095	.127	.168	.222
		Nc	<20	<20	22	27	32	38	45	>45
		Throw	14	19	23	28	32	38	40	44
2'x2' Face Only (Used as return) Ak 1.94		Cfm	582	776	970	1164	1358	1552	1746	1940

Terminal Velocity of 75 fpm

RFF SERIES REMOVABLE
FLUSH FACE PERFORATED DIFFUSERS

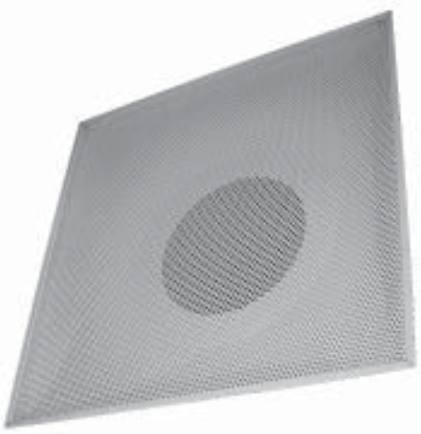

- Removable Perforated Steel Face
- Flush Face
- Return RFFA Available
  - Without Deflectors
- Supply RFF4A Available
  - With 4-Way Deflectors
- Steel Plenum
- Non-Insulated
- RFFA & RFF4A Utilize
  - 6"-12" 5400 Series Collar
- Accepts 3800 Series
  - Damper in Collar
- Removable Face for Easy Cleaning
  - & Access to Deflectors
- White Finish

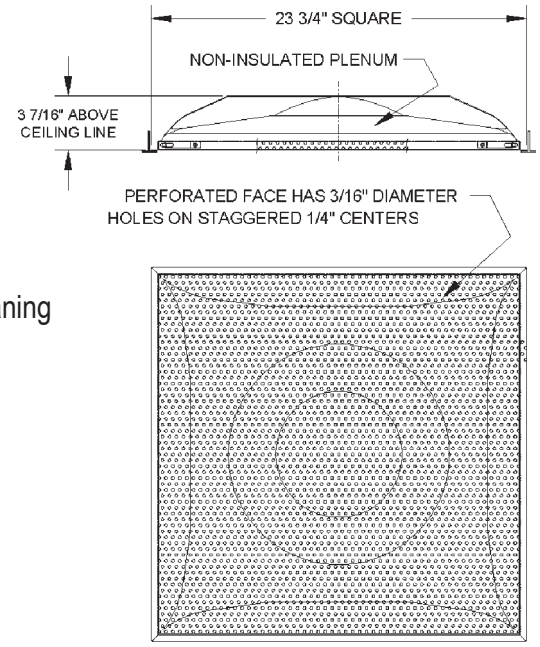

Engineer's specs on page 83

RFF SERIES REMOVABLE FLUSH FACE PERFORATED DIFFUSERS

UNIT SIZE	OVERALL SIZE	NECK VELOCITY	300	400	500	600	700	800	900	1000
2'x2'	23 3/4 x 23 3/4	Cfm	60	80	100	120	140	160	180	200
6" Duct		Ps	.005	.009	.015	.021	.027	.037	.047	.058
An .20		Nc	<20	<20	<20	<20	21	26	32	34
		Throw	4	5	6	7	9	10	12	13
2'x2'	23 3/4 x 23 3/4	Cfm	81	108	135	162	189	216	243	270
7" Duct		Ps	.006	.010	.016	.022	.032	.043	.053	.066
An .27		Nc	<20	<20	<20	<20	21	27	32	35
		Throw	5	6	7	9	11	12	14	15
2'x2'	23 3/4 x 23 3/4	Cfm	105	140	175	209	244	279	314	349
8" Duct"		Ps	.007	.012	.019	.027	.037	.049	.060	.074
An .35		Nc	<20	<20	<20	<20	22	28	33	36
		Throw	6	7	9	11	12	14	15	17
2'x2'	23 3/4 x 23 3/4	Cfm	133	177	221	265	309	353	398	442
9" Duct		Ps	.007	.013	.021	.030	.042	.054	.068	.084
An .44		Nc	<20	<20	<20	21	24	30	34	37
		Throw	7	8	10	13	15	17	19	22
2'x2'	23 3/4 x 23 3/4	Cfm	164	218	273	327	382	436	491	545
10" Duct		Ps	.008	.015	.023	.033	.046	.060	.076	.093
An .54		Nc	<20	<20	<20	22	27	32	36	39
		Throw	8	10	13	16	18	21	24	26
2'x2'	23 3/4 x 23 3/4	Cfm	236	314	393	471	550	628	707	785
12" Duct		Ps	.010	.018	.027	.039	.053	.070	.088	.110
An .78		Nc	<20	<20	<20	23	27	35	38	41
		Throw	10	12	16	19	21	24	27	29
2'x2'	23 3/4 x 23 3/4	Cfm	321	428	535	641	748	855	962	1069
14" Duct		Ps	.011	.020	.031	.045	.060	.080	.105	.125
An 1.07		Nc	<20	<20	<20	25	31	34	39	43
		Throw	11	14	19	22	25	28	31	34
2'x2'	23 3/4 x 23 3/4	Cfm	420	560	700	840	980	1120	1260	1400
16" Duct		Ps	.018	.031	.048	.070	.092	.120	.153	.195
An 1.40		Nc	<20	<20	24	29	36	42	>45	>45
		Throw	12	17	21	25	29	34	36	40
2'x2'	23 3/4 x 23 3/4	Cfm	531	708	885	1062	1239	1416	1593	1770
18" Duct		Ps	.018	.031	.049	.070	.094	.125	.166	.220
An 1.77		Nc	<20	<20	23	28	34	40	>45	>45
		Throw	13	18	22	26	31	36	38	42
2'x2'	23 3/4 x 23 3/4	Cfm	654	872	1090	1308	1526	1744	1962	2180
20" Duct		Ps	.019	.031	.049	.071	.095	.127	.168	.222
An 2.18		Nc	<20	<20	22	27	32	38	45	>45
		Throw	14	19	23	28	32	38	40	44
2'x2' Face Only (Used as return) Ak 1.94		Cfm	582	776	970	1164	1358	1552	1746	1940

Terminal Velocity of 75 fpm

Noise Criteria Chart located on page 96

CS244/344 SERIES
LOUVERED T-BAR CEILING DIFFUSERS

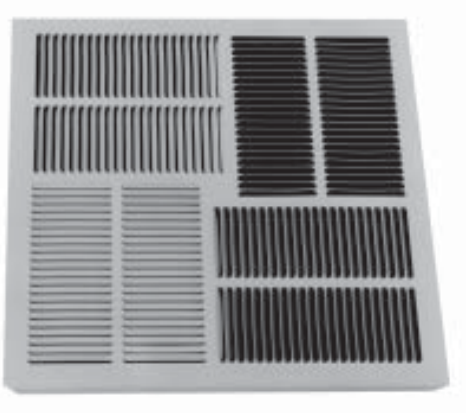

Steel Construction
R6 Molded Fiberglass Back Panel
Self-insulated to Absorb Sound
Bonded Foil Vapor Barrier Minimizes Condensation
Deep Back Cavity Provides Excellent Performance Characteristics
Prescored Back - Accepts 1" Spin In or Top Co
Allowing Neck Size to be Determined at Time of Installation
Damper Adjusted through Diffuser Face
to Allow Proper Air Balancing
CS244 1/2" Spaced Fins
CS344 1/3" Spaced Fins
White Finish
Seismic Tabs

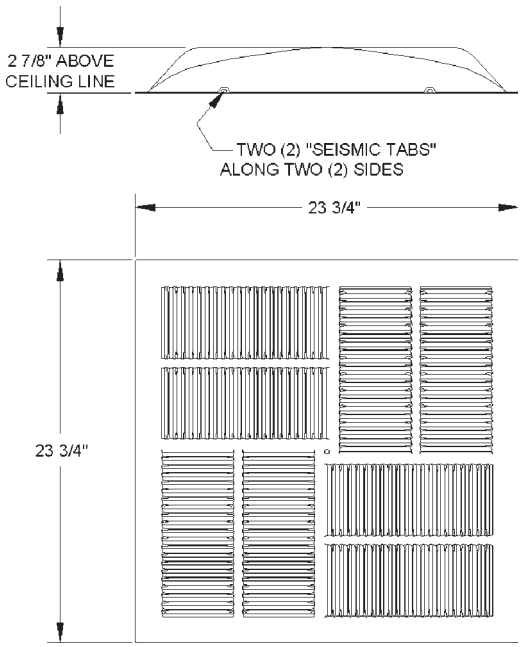

CS244/344 SERIES

UNIT SIZE	OVERALL SIZE	NECK VELOCITY	300	400	500	600	700	800	900	1000
2'x2' 6" Duct An .20	23 3/4 x 23 3/4	Cfm	60	80	100	120	140	160	180	200
		Ps	.006	.009	.013	.017	.024	.031	.039	.047
		Nc	<20	<20	<20	22	26	30	35	40
		Throw	4	5	6	7	9	10	12	13
2'x2' 7" Duct An .27	23 3/4 x 23 3/4	Cfm	81	108	135	162	189	216	243	270
		Ps	.006	.010	.014	.019	.027	.034	.043	.053
		Nc	<20	<20	20	24	28	34	38	42
		Throw	5	6	7	9	11	12	14	15
2'x2' 8" Duct An .35	23 3/4 x 23 3/4	Cfm	105	140	175	209	244	279	314	349
		Ps	.006	.010	.015	.021	.031	.038	.049	.059
		Nc	<20	<20	21	26	31	39	42	>45
		Throw	6	7	9	11	12	14	15	17
2'x2' 9" Duct An .44	23 3/4 x 23 3/4	Cfm	133	177	221	265	309	353	398	442
		Ps	.007	.011	.017	.024	.033	.043	.054	.066
		Nc	<20	<20	21	26	32	39	43	>45
		Throw	7	8	10	13	15	17	19	22
2'x2' 10" Duct An .54	23 3/4 x 23 3/4	Cfm	164	218	273	327	382	436	491	545
		Ps	.008	.012	.019	.027	.037	.048	.061	.075
		Nc	<20	<20	21	26	34	40	43	>45
		Throw	8	10	13	16	18	21	24	26

Engineer's specs continued on page 85

CS244/344 SERIES

UNIT SIZE	OVERALL SIZE	Neck Velocity	300	400	500	600	700	800	900	1000
2'x2' 12" Duct An .78	23 3/4 x 23 3/4	Cfm	236	314	393	471	550	628	707	785
		Ps	.008	.014	.022	.033	.045	.061	.075	.093
		Nc	<20	20	25	33	40	44	>45	>45
		Throw	10	12	16	19	21	24	27	29
2'x2' 14" Duct An 1.07	23 3/4 x 23 3/4	Cfm	321	428	535	641	748	855	962	1069
		Ps	.009	.017	.027	.040	.055	.075	.093	.115
		Nc	<20	20	25	30	38	45	>45	>45
		Throw	11	14	19	22	25	28	31	34
2'x2' 16" Duct An 1.40	23 3/4 x 23 3/4	Cfm	420	560	700	840	980	1120	1260	1400
		Ps	.010	.019	.032	.049	.067	.092	.113	.141
		Nc	<20	<20	24	29	36	42	>45	>45
		Throw	12	17	21	25	29	34	36	40
2'x2' 18" Duct An 1.77	23 3/4 x 23 3/4	Cfm	531	708	885	1062	1239	1416	1593	1770
		Ps	.011	.021	.034	.053	.073	.101	.123	.154
		Nc	<20	<20	23	28	34	40	>45	>45
		Throw	12	17	21	25	29	34	36	40
2'x2' 20" Duct An 2.18	23 3/4 x 23 3/4	Cfm	654	872	1090	1308	1526	1744	1962	2180
		Ps	.012	.022	.035	.055	.076	.105	.128	.160
		Nc	<20	<20	22	27	32	38	45	>45
		Throw	14	19	23	28	32	38	40	44
2'x2' Face Only (Used as return) Ak 2.31		Cfm	693	924	1155	1386	1617	1848	2079	2310

Terminal Velocity of 75 fpm

440 SERIES SURFLO
T-BAR CEILING DIFFUSERS

Patented Design
One-way, Two-way, Three-way or Four-way Throw Patterns
Air Diffused in a Thin Layer along Ceiling Surface
Allowing Optimum Distribution of Conditioned air
Formed Steel Back Plenum
Fiberglass Insulation with Vapor Barrier Foil
to Reduce Condensation
Insulation Blanket Prescored to
Accommodate Various Collar Sizes
Utilizes Snap-in Collar (5400 Series)
Accepts Butterfly Damper (3800 Series) Inserted in Collar
Damper Adjusted through Diffuser Face to
Allow Proper Air Balancing
White Finish
Seismic Tabs

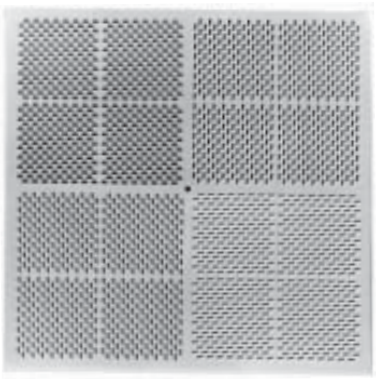

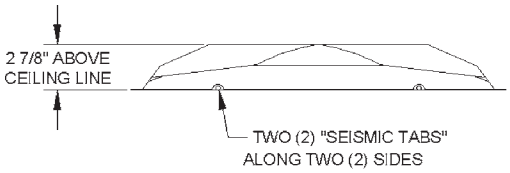

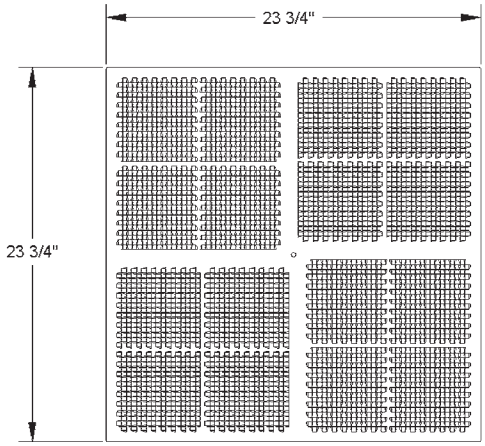

SURFLO™ By Continental

Engineer's specs on page 86

SURFLO 440 SERIES T-BAR CEILING DIFFUSERS items 441, 445

UNIT SIZE	OVERALL SIZE	NECK VELOCITY	250	350	450	550	650	750	850	1000	1200
6"	23 3/4 x 23 3/4	Cfm	50	65	85	105	130	150	165	195	230
		Ps	.004	.009	.014	.021	.029	.036	.046	.065	.094
		Nc	<20	<20	<20	<20	<20	23	27	31	35
Ak .37		441 Throw	5.5	7	9.5	11	14	16	18	22	24
Ak .43		445 Throw	4	5	6.5	8	10	11	13	15	17
7"	23 3/4 x 23 3/4	Cfm	70	95	120	150	180	205	230	270	310
		Ps	.005	.011	.016	.025	.034	.045	.058	.081	.117
		Nc	<20	<20	<20	<20	<20	24	28	30	33
Ak .42		441 Throw	6.5	8.5	11	15	17	19	22	24	26
Ak.48		445 Throw	4.5	6	8	10	12	13	16	17	19
8"	23 3/4 x 23 3/4	Cfm	85	120	150	190	220	260	300	350	410
		Ps	.006	.012	.019	.029	.040	.054	.070	.098	.140
		Nc	<20	<20	<20	<20	21	26	31	34	37
Ak .45		441 Throw	7	10	13	16	18	21	25	29	31
Ak .53		445 Throw	5	7	9.5	12	13	15	18	21	23
9"	23 3/4 x 23 3/4	Cfm	110	150	200	245	295	330	365	450	550
		Ps	.007	.014	.023	.036	.051	.066	.086	.119	.172
		Nc	<20	<20	<20	19	26	31	33	37	41
Ak .50		441 Throw	6	10	14	18	22	24	27	29	31
Ak .58		445 Throw	8	7.5	10	13	16	17	19	20	22
10"	23 3/4 x 23 3/4	Cfm	140	180	245	300	360	410	450	550	650
		Ps	.009	.017	.028	.043	.069	.078	.102	.140	.205
		Nc	<20	<20	<20	22	29	35	38	42	>45
Ak .53		441 Throw	9	12	16	20	24	27	30	32	34
Ak .62		445 Throw	6.5	9	11	14	17	19	21	23	24
12"	23 3/4 x 23 3/4	Cfm	190	245	350	450	530	590	660	780	920
		Ps	.012	.024	.040	.059	.082	.110	.142	.195	.275
		Nc	<20	<20	22	28	35	39	44	>45	>45
Ak .59		441 Throw	10	13	19	25	30	32	33	34	35
Ak .70		445 Throw	7.5	9	14	17	21	23	24	25	26
14"	23 3/4 x 23 3/4	Cfm	285	375	480	590	695	800	900	1075	1275
		Ps	.015	.031	.050	.075	.105	.137	.177	.245	.350
		Nc	<20	21	27	31	36	40	45	>45	>45
Ak .64		441 Throw	8	13	22	26	28	30	31	32	33
Ak .75		445 Throw	6	10	16	20	22	24	26	28	30

Terminal Velocity of 75 fpm

SURFLO 440 SERIES T-BAR CEILING DIFFUSERS items 442, 443, 444

UNIT SIZE	OVERALL SIZE	NECK VELOCITY	250	350	450	550	650	750	850	1000	1200
6"	23 3/4 x 23 3/4	Cfm	50	65	85	105	125	145	165	195	235
		Ps	.004	.009	.014	.021	.029	.036	.046	.065	.094
		Nc	<20	<20	<20	<20	<20	23	27	31	35
Ak .43		444 Throw	3	3.5	4.5	6	7.5	8	9	11	12
Ak .43		443 Throw	3/4	3.5/5	4.5/6.5	6/8	7.5/10	8/11	9/13	11/15	12/17
Ak .43		442 Throw	4	5	6.5	8	10	11	13	15	17
7"	23 3/4 x 23 3/4	Cfm	70	95	115	140	175	195	230	265	305
		Ps	.005	.011	.016	.025	.034	.045	.058	.081	.117
		Nc	<20	<20	<20	<20	17	21	25	28	30
Ak .48		444 Throw	3.5	4.5	5.5	6.5	8	9	11	12	14
Ak .48		443 Throw	3.5/4.5	4.5/6.5	5.5/8	6.5/9	8/11	9/13	11/16	12/17	14/20
Ak .48		442 Throw	4.5	6.5	8	9	11	13	16	17	20
8"	23 3/4 x 23 3/4	Cfm	9	115	155	195	230	265	300	350	410
		Ps	.006	.012	.019	.029	.040	.054	.070	.098	.140
		Nc	<20	<20	<20	<20	21	26	31	34	37
Ak .53		444 Throw	4	5	6.5	8	9.5	11	13	15	17
Ak .53		443 Throw	4.5/5	5/7	6.5/9	8/11	9.5/14	11/16	13/19	15/21	17/23
Ak .53		442 Throw	5.5	7	9	11	14	16	19	21	23

Engineer's specs continued on page 87

SURFLO 440 SERIES T-BAR CEILING DIFFUSERS items 442, 443, 444 (CON'TD)

UNIT SIZE	OVERALL SIZE	NECK VELOCITY	250	350	450	550	650	750	850	1000	1200
9"	23 3/4 x 23 3/4	Cfm	110	155	200	245	290	340	380	440	540
		Ps	.007	.014	.023	.036	.051	.066	.086	.119	.172
		Nc	<20	<20	<20	<20	26	31	33	37	40
Ak .575		444 Throw	4	6	7.5	9	11	13	14	16	18
Ak .575		443 Throw	4.5/5	6/8	7.5/11	9/13	11/15	13/18	14/20	16/23	18/25
Ak .575		442 Throw	5.5	8	11	13	15	18	20	23	25
10"	23 3/4 x 23 3/4	Cfm	135	190	245	300	355	400	460	540	660
		Ps	.007	.014	.023	.036	.051	.066	.086	.119	.172
		Nc	<20	<20	<20	22	29	35	38	42	>45
Ak .62		444 Throw	4	6	8	10	12	13	15	18	19
Ak .62		443 Throw	4/6	6/8	8/11	10/14	12/17	13/19	15/21	18/25	19/26
Ak .62		442 Throw	6	8	11	14	17	19	21	25	26
12"	23 3/4 x 23 3/4	Cfm	180	275	350	430	510	580	650	780	920
		Ps	.012	.024	.040	.059	.082	.110	.142	.195	.275
		Nc	<20	<20	22	28	35	39	44	>45	>45
Ak .70		444 Throw	5	7.5	10	11.5	14	16	18	19	20
Ak .70		443 Throw	5/8.5	7.5/11	10/14	11.5/17	14/19	16/23	18/25	19/26	20/27
Ak .70		442 Throw	8.5	11	14	17	19	23	25	26	27
14"	23 3/4 x 23 3/4	Cfm	275	380	490	600	700	805	910	1075	1300
		Ps	.015	.031	.050	.075	.105	.137	.177	.245	.350
		Nc	<20	21	27	31	36	40	45	>45	>45
Ak .75		444 Throw	6	9	11	14	17	19	20	22	24
Ak .75		443 Throw	6/8.5	9/13	11/16	14/20	17/24	19/26	20/27	22/28	24/29
Ak .75		442 Throw	8.5	13	16	20	24	26	27	28	29

Terminal Velocity of 75 fpm

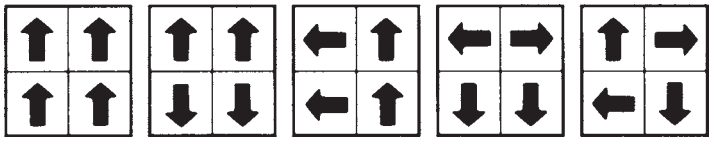

One-way Throw 441 | Two-way Throw 442 | Two-way Corner Throw 445 | Three-way Throw 443 | Four-way Throw 444

CS440 SERIES SURFLO
T-BAR CEILING DIFFUSERS

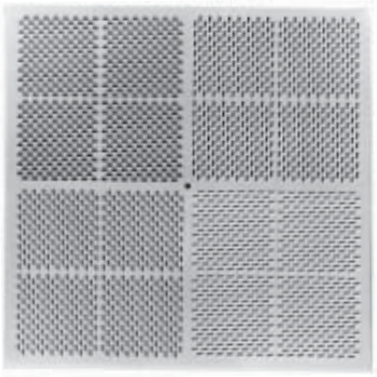

Patented Face
One-way, Two-way, Three-way or Four-way Throw Patterns
Steel Face
Air Diffused in a Thin Layer Along Ceiling Surface
Allowing Optimum Distribution of Conditioned Air
Available With or Without Molded R6 Fiberglass Plenum
Prescored P106 Fiberglass Plenum
Accepts 1" Spin In or Top Collar Allowing Neck Size
to be Determined at Time of Installation
White Finish
Seismic Tabs

SURFLO™ By Continental

Engineer's specs on page 88

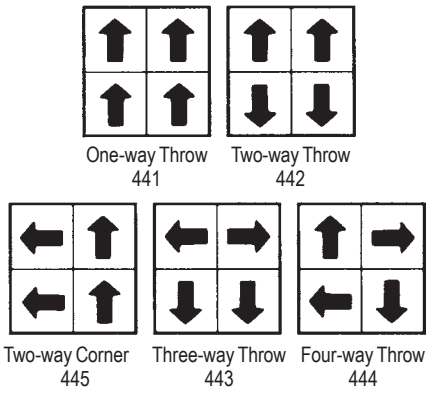

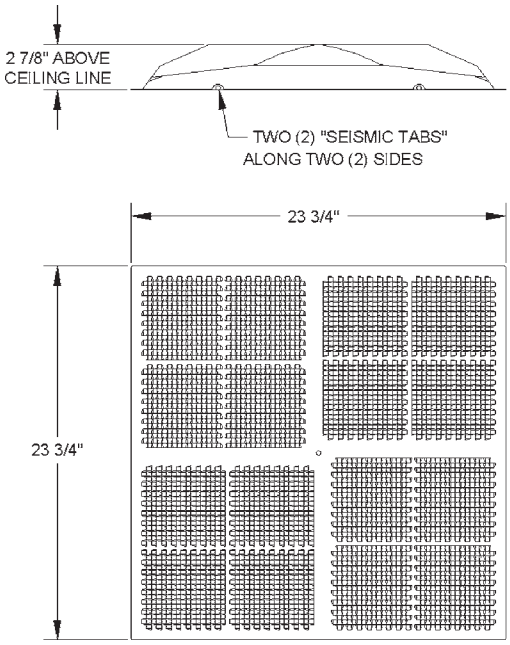

SURFLO CS440 SERIES T-BAR CEILING DIFFUSERS items 441, 445

UNIT SIZE	OVERALL SIZE	NECK VELOCITY	250	350	450	550	650	750	850	1000	1200
6"	23 3/4 x 23 3/4	Cfm	50	65	85	105	130	150	165	195	230
		Ps	.004	.009	.014	.021	.029	.036	.046	.065	.094
		Nc	<20	<20	<20	<20	<20	23	27	31	35
Ak .37		441 Throw	5.5	7	9.5	11	14	16	18	22	24
Ak .43		445 Throw	4	5	6.5	8	10	11	13	15	17
7"	23 3/4 x 23 3/4	Cfm	70	95	120	150	180	205	230	270	310
		Ps	.005	.011	.016	.025	.034	.045	.058	.081	.117
		Nc	<20	<20	<20	<20	<20	24	28	30	33
Ak .42		441 Throw	6.5	8.5	11	15	17	19	22	24	26
Ak.48		445 Throw	4.5	6	8	10	12	13	16	17	19
8"	23 3/4 x 23 3/4	Cfm	85	120	150	190	220	260	300	350	410
		Ps	.006	.012	.019	.029	.040	.054	.070	.098	.140
		Nc	<20	<20	<20	<20	21	26	31	34	37
Ak .45		441 Throw	7	10	13	16	18	21	25	29	31
Ak .53		445 Throw	5	7	9.5	12	13	15	18	21	23
9"	23 3/4 x 23 3/4	Cfm	110	150	200	245	295	330	365	450	550
		Ps	.007	.014	.023	.036	.051	.066	.086	.119	.172
		Nc	<20	<20	<20	19	26	31	33	37	41
Ak .50		441 Throw	6	10	14	18	22	24	27	29	31
Ak .58		445 Throw	8	7.5	10	13	16	17	19	20	22
10"	23 3/4 x 23 3/4	Cfm	140	180	245	300	360	410	450	550	650
		Ps	.009	.017	.028	.043	.069	.078	.102	.140	.205
		Nc	<20	<20	<20	22	29	35	38	42	>45
Ak .53		441 Throw	9	12	16	20	24	27	30	32	34
Ak .62		445 Throw	6.5	9	11	14	17	19	21	23	24
12"	23 3/4 x 23 3/4	Cfm	190	245	350	450	530	590	660	780	920
		Ps	.012	.024	.040	.059	.082	.110	.142	.195	.275
		Nc	<20	<20	22	28	35	39	44	>45	>45
Ak .59		441 Throw	10	13	19	25	30	32	33	34	35
Ak .70		445 Throw	7.5	9	14	17	21	23	24	25	26
14"	23 3/4 x 23 3/4	Cfm	285	375	480	590	695	800	900	1075	1275
		Ps	.015	.031	.050	.075	.105	.137	.177	.245	.350
		Nc	<20	21	27	31	36	40	45	>45	>45
Ak .64		441 Throw	8	13	22	26	28	30	31	32	33
Ak .75		445 Throw	6	10	16	20	22	24	26	28	30

Terminal Velocity of 75 fpm

Engineer's specs continued on page 89

SURFLO CS440 SERIES T-BAR CEILING DIFFUSERS items 442, 443, 444

UNIT SIZE	OVERALL SIZE	NECK VELOCITY	250	350	450	550	650	750	850	1000	1200
6"	23 3/4 x 23 3/4	Cfm	50	65	85	105	125	145	165	195	235
		Ps	.004	.009	.014	.021	.029	.036	.046	.065	.094
		Nc	<20	<20	<20	<20	<20	23	27	31	35
Ak .43		444 Throw	3	3.5	4.5	6	7.5	8	9	11	12
Ak .43		443 Throw	3/4	3.5/5	4.5/6.5	6/8	7.5/10	8/11	9/13	11/15	12/17
Ak .43		442 Throw	4	5	6.5	8	10	11	13	15	17
7"	23 3/4 x 23 3/4	Cfm	70	95	115	140	175	195	230	265	305
		Ps	.005	.011	.016	.025	.034	.045	.058	.081	.117
		Nc	<20	<20	<20	<20	17	21	25	28	30
Ak .48		444 Throw	3.5	4.5	5.5	6.5	8	9	11	12	14
Ak .48		443 Throw	3.5/4.5	4.5/6.5	5.5/8	6.5/9	8/11	9/13	11/16	12/17	14/20
Ak .48		442 Throw	4.5	6.5	8	9	11	13	16	17	20
8"	23 3/4 x 23 3/4	Cfm	9	115	155	195	230	265	300	350	410
		Ps	.006	.012	.019	.029	.040	.054	.070	.098	.140
		Nc	<20	<20	<20	<20	21	26	31	34	37
Ak .53		444 Throw	4	5	6.5	8	9.5	11	13	15	17
Ak .53		443 Throw	4.5/5	5/7	6.5/9	8/11	9.5/14	11/16	13/19	15/21	17/23
Ak .53		442 Throw	5.5	7	9	11	14	16	19	21	23
9"	23 3/4 x 23 3/4	Cfm	110	155	200	245	290	340	380	440	540
		Ps	.007	.014	.023	.036	.051	.066	.086	.119	.172
		Nc	<20	<20	<20	<20	26	31	33	37	40
Ak .575		444 Throw	4	6	7.5	9	11	13	14	16	18
Ak .575		443 Throw	4.5/5	6/8	7.5/11	9/13	11/15	13/18	14/20	16/23	18/25
Ak .575		442 Throw	5.5	8	11	13	15	18	20	23	25
10"	23 3/4 x 23 3/4	Cfm	135	190	245	300	355	400	460	540	660
		Ps	.007	.014	.023	.036	.051	.066	.086	.119	.172
		Nc	<20	<20	<20	22	29	35	38	42	>45
Ak .62		444 Throw	4	6	8	10	12	13	15	18	19
Ak .62		443 Throw	4/6	6/8	8/11	10/14	12/17	13/19	15/21	18/25	19/26
Ak .62		442 Throw	6	8	11	14	17	19	21	25	26
12"	23 3/4 x 23 3/4	Cfm	180	275	350	430	510	580	650	780	920
		Ps	.012	.024	.040	.059	.082	.110	.142	.195	.275
		Nc	<20	<20	22	28	35	39	44	>45	>45
Ak .70		444 Throw	5	7.5	10	11.5	14	16	18	19	20
Ak .70		443 Throw	5/8.5	7.5/11	10/14	11.5/17	14/19	16/23	18/25	19/26	20/27
Ak .70		442 Throw	8.5	11	14	17	19	23	25	26	27
14"	23 3/4 x 23 3/4	Cfm	275	380	490	600	700	805	910	1075	1300
		Ps	.015	.031	.050	.075	.105	.137	.177	.245	.350
		Nc	<20	21	27	31	36	40	45	>45	>45
Ak .75		444 Throw	6	9	11	14	17	19	20	22	24
Ak .75		443 Throw	6/8.5	9/13	11/16	14/20	17/24	19/26	20/27	22/28	24/29
Ak .75		442 Throw	8.5	13	16	20	24	26	27	28	29

Terminal Velocity of 75 fpm

Noise Criteria Chart located on page 96

4406 SERIES SURFLO
T-BAR CEILING DIFFUSERS

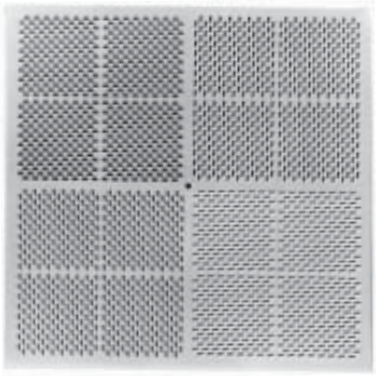

Stamped Steel
Steel Plenum With Foil Vapor Barrier
R6 Insulated Blanket
Patented Face
One-way, Two-way, Three-way or Four-way Throw Patterns
Steel Face
Air Diffused in a Thin Layer Along Ceiling Surface
    Allowing Optimum Distribution of Conditioned Air
Utilizes 5400 Series Collar
Accepts 3800 Series Damper Inserted in Collar
White Finish
Seismic Tabs

SURFLO™
By Continental

SURFLO 4406 SERIES T-BAR CEILING DIFFUSERS items 441, 445

UNIT SIZE	OVERALL SIZE	NECK VELOCITY	250	350	450	550	650	750	850	1000	1200
6"	23 3/4 x 23 3/4	Cfm	50	65	85	105	130	150	165	195	230
		Ps	.004	.009	.014	.021	.029	.036	.046	.065	.094
		Nc	<20	<20	<20	<20	<20	23	27	31	35
Ak .37		441 Throw	5.5	7	9.5	11	14	16	18	22	24
Ak .43		445 Throw	4	5	6.5	8	10	11	13	15	17
7"	23 3/4 x 23 3/4	Cfm	70	95	120	150	180	205	230	270	310
		Ps	.005	.011	.016	.025	.034	.045	.058	.081	.117
		Nc	<20	<20	<20	<20	<20	24	28	30	33
Ak .42		441 Throw	6.5	8.5	11	15	17	19	22	24	26
Ak.48		445 Throw	4.5	6	8	10	12	13	16	17	19
8"	23 3/4 x 23 3/4	Cfm	85	120	150	190	220	260	300	350	410
		Ps	.006	.012	.019	.029	.040	.054	.070	.098	.140
		Nc	<20	<20	<20	<20	21	26	31	34	37
Ak .45		441 Throw	7	10	13	16	18	21	25	29	31
Ak .53		445 Throw	5	7	9.5	12	13	15	18	21	23
9"	23 3/4 x 23 3/4	Cfm	110	150	200	245	295	330	365	450	550
		Ps	.007	.014	.023	.036	.051	.066	.086	.119	.172
		Nc	<20	<20	<20	19	26	31	33	37	41
Ak .50		441 Throw	6	10	14	18	22	24	27	29	31
Ak .58		445 Throw	8	7.5	10	13	16	17	19	20	22
10"	23 3/4 x 23 3/4	Cfm	140	180	245	300	360	410	450	550	650
		Ps	.009	.017	.028	.043	.069	.078	.102	.140	.205
		Nc	<20	<20	<20	22	29	35	38	42	>45
Ak .53		441 Throw	9	12	16	20	24	27	30	32	34
Ak .62		445 Throw	6.5	9	11	14	17	19	21	23	24
12"	23 3/4 x 23 3/4	Cfm	190	245	350	450	530	590	660	780	920
		Ps	.012	.024	.040	.059	.082	.110	.142	.195	.275
		Nc	<20	<20	22	28	35	39	44	>45	>45
Ak .59		441 Throw	10	13	19	25	30	32	33	34	35
Ak .70		445 Throw	7.5	9	14	17	21	23	24	25	26
14"	23 3/4 x 23 3/4	Cfm	285	375	480	590	695	800	900	1075	1275
		Ps	.015	.031	.050	.075	.105	.137	.177	.245	.350
		Nc	<20	21	27	31	36	40	45	>45	>45
Ak .64		441 Throw	8	13	22	26	28	30	31	32	33
Ak .75		445 Throw	6	10	16	20	22	24	26	28	30

Terminal Velocity of 75 fpm

Engineer's specs continued on page 91

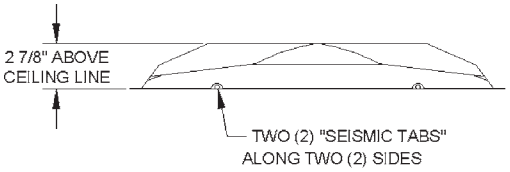

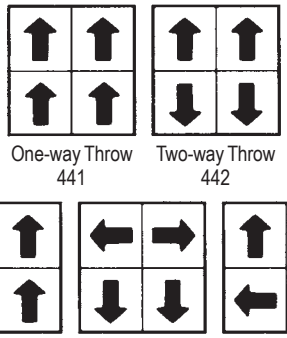

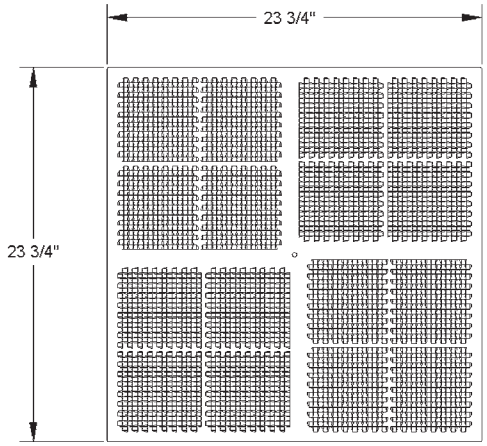

SURFLO 4406 SERIES T-BAR CEILING DIFFUSERS items 442, 443, 444

UNIT SIZE	OVERALL SIZE	NECK VELOCITY	250	350	450	550	650	750	850	1000	1200
6"	23 3/4 x 23 3/4	Cfm	50	65	85	105	125	145	165	195	235
		Ps	.004	.009	.014	.021	.029	.036	.046	.065	.094
		Nc	<20	<20	<20	<20	<20	23	27	31	35
Ak .43		444 Throw	3	3.5	4.5	6	7.5	8	9	11	12
Ak .43		443 Throw	3/4	3.5/5	4.5/6.5	6/8	7.5/10	8/11	9/13	11/15	12/17
Ak .43		442 Throw	4	5	6.5	8	10	11	13	15	17
7"	23 3/4 x 23 3/4	Cfm	70	95	115	140	175	195	230	265	305
		Ps	.005	.011	.016	.025	.034	.045	.058	.081	.117
		Nc	<20	<20	<20	<20	17	21	25	28	30
Ak .48		444 Throw	3.5	4.5	5.5	6.5	8	9	11	12	14
Ak .48		443 Throw	3.5/4.5	4.5/6.5	5.5/8	6.5/9	8/11	9/13	11/16	12/17	14/20
Ak .48		442 Throw	4.5	6.5	8	9	11	13	16	17	20
8"	23 3/4 x 23 3/4	Cfm	9	115	155	195	230	265	300	350	410
		Ps	.006	.012	.019	.029	.040	.054	.070	.098	.140
		Nc	<20	<20	<20	<20	21	26	31	34	37
Ak .53		444 Throw	4	5	6.5	8	9.5	11	13	15	17
Ak .53		443 Throw	4.5/5	5/7	6.5/9	8/11	9.5/14	11/16	13/19	15/21	17/23
Ak .53		442 Throw	5.5	7	9	11	14	16	19	21	23
9"	23 3/4 x 23 3/4	Cfm	110	155	200	245	290	340	380	440	540
		Ps	.007	.014	.023	.036	.051	.066	.086	.119	.172
		Nc	<20	<20	<20	<20	26	31	33	37	40
Ak .575		444 Throw	4	6	7.5	9	11	13	14	16	18
Ak .575		443 Throw	4.5/5	6/8	7.5/11	9/13	11/15	13/18	14/20	16/23	18/25
Ak .575		442 Throw	5.5	8	11	13	15	18	20	23	25
10"	23 3/4 x 23 3/4	Cfm	135	190	245	300	355	400	460	540	660
		Ps	.007	.014	.023	.036	.051	.066	.086	.119	.172
		Nc	<20	<20	<20	22	29	35	38	42	>45
Ak .62		444 Throw	4	6	8	10	12	13	15	18	19
Ak .62		443 Throw	4/6	6/8	8/11	10/14	12/17	13/19	15/21	18/25	19/26
Ak .62		442 Throw	6	8	11	14	17	19	21	25	26
12"	23 3/4 x 23 3/4	Cfm	180	275	350	430	510	580	650	780	920
		Ps	.012	.024	.040	.059	.082	.110	.142	.195	.275
		Nc	<20	<20	22	28	35	39	44	>45	>45
Ak .70		444 Throw	5	7.5	10	11.5	14	16	18	19	20
Ak .70		443 Throw	5/8.5	7.5/11	10/14	11.5/17	14/19	16/23	18/25	19/26	20/27
Ak .70		442 Throw	8.5	11	14	17	19	23	25	26	27
14"	23 3/4 x 23 3/4	Cfm	275	380	490	600	700	805	910	1075	1300
		Ps	.015	.031	.050	.075	.105	.137	.177	.245	.350
		Nc	<20	21	27	31	36	40	45	>45	>45
Ak .75		444 Throw	6	9	11	14	17	19	20	22	24
Ak .75		443 Throw	6/8.5	9/13	11/16	14/20	17/24	19/26	20/27	22/28	24/29
Ak .75		442 Throw	8.5	13	16	20	24	26	27	28	29

Terminal Velocity of 75 fpm

3700 SERIES T-BAR DIFFUSER DAMPERS FOR PRE-FAB (SPIN-IN) TOP COLLAR

Galvanized Steel Construction
Utilizes S-Clips for Use with Round Pipe
Adjustable Butterfly Damper with
Removable T-Bar Handle Included
Available in 6", 7", 8", 9", 10", 12", 14" Sizes

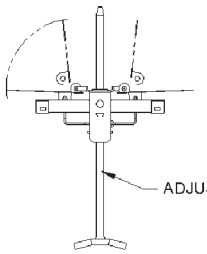

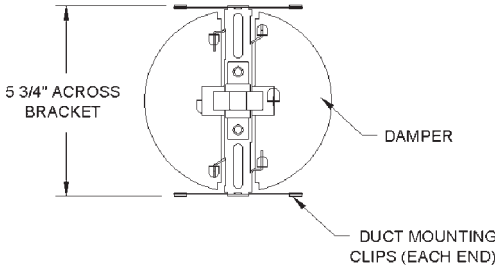

6" SHOWN

3800 SERIES T-BAR DIFFUSER BUTTERFLY DAMPERS

Adjustable Butterfly Damper with
Removable T-Bar Handle Included
Galvanized Steel construction
Available in 6", 7", 8", 9", 10",
12", 14" Sizes
For Use with 5400 Collar

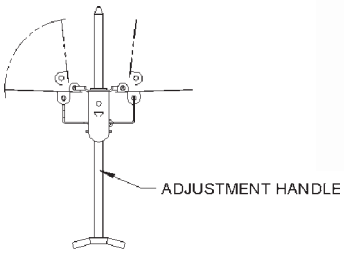

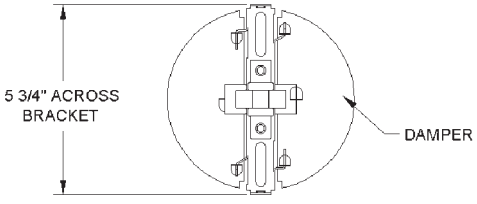

6" SHOWN

5400 SERIES T-BAR DIFFUSER COLLARS

Unique Collar Ring for T-Bar Diffusers
For Use with 3800 Dampers or "A" HVS, FPD,
44A, 6500 or 6800 Diffusers
Galvanized Steel Construction
Available in 6", 7", 8", 9", 10" & 12" Sizes

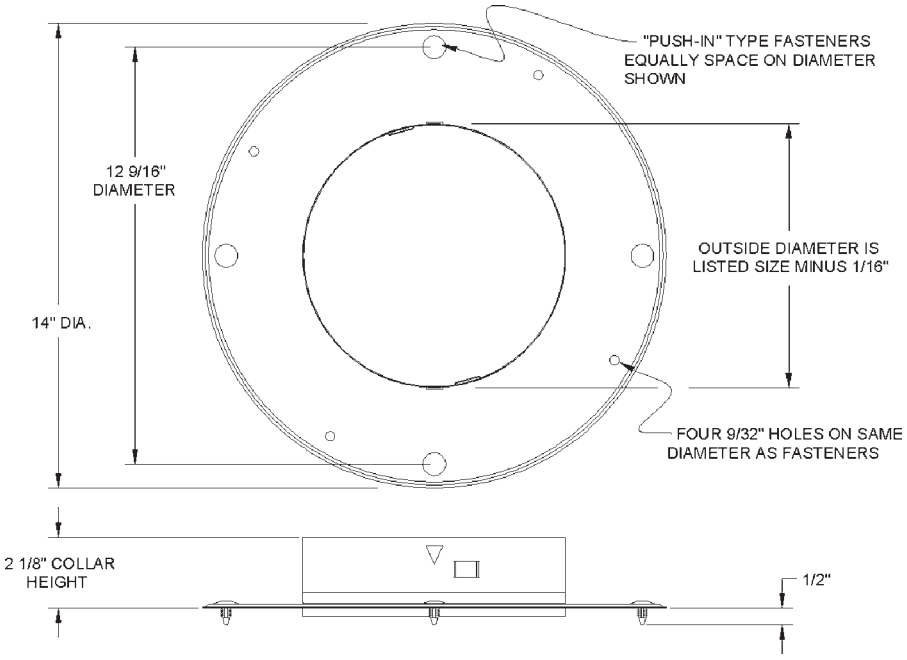

Installation Instructions for Utilizing the 5400 Series Collar

* **Steel Plenums** The 5400 Collar comes from the factory with four (4) short mushroom head fasteners for attaching the 5400 Collar to the PDSA or HVSA "adaptable" steel plenum (PM). Simply line up the four plastic fasteners attached to the 5400 collar with the mounting holes on the back of the steel plenum and push firmly into place.

* **Fiberglass Plenums** The duct opening required for the size collar desired should be cut in the fiberglass plenum. Once you have removed the four (4) short plastic mushroom head fasteners from the 5400 collar you should then position the collar on the fiberglass plenum over the duct opening. The four (4) holes should be marked with a small screwdriver or awl being inserted through the hole and through the plenum.

Diagram A

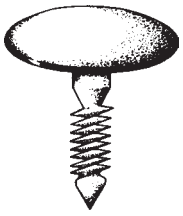

PF175 FASTENER

The MUSHROOM-HEAD PF175 FASTENER (1 3/4" shank, Diagram A) is required to attach the fiberglass plenum to the collar. The PF175 fastener should be inserted from the inside of the plenum by reaching through the duct opening and pressing the MUSHROOM-HEAD P175 FASTENER through the fiberglass plenum and 5400 collar.

PF175
FASTENER

For Use with 5400 Collar when Attaching to Series P106 Fiberglass

TOUCH -UP PAINT

9.0 oz. Spray Can
Available in Brown or White

CONTINENTAL
THE REGISTER PEOPLE

Symbols

CFM ..... **Volume (in cubic feet per minute)**
FA ..... **Free Area (in sq. in.)**
PL ..... **Total pressure loss (in w.g.)**
FPM ..... **Feet per minute**
AN ..... **Neck area (in sq. ft.)**
PS ..... **Static pressure**
Face Velocity ..... **The average calculated velocity (in fpm)**
Throw ..... **Throw (in fpm)**
Spread ..... **The horizontal distance of the air pattern (in fpm)**
AK ..... **Effective area (in sq. ft.)**
NC ..... **Noise criteria**

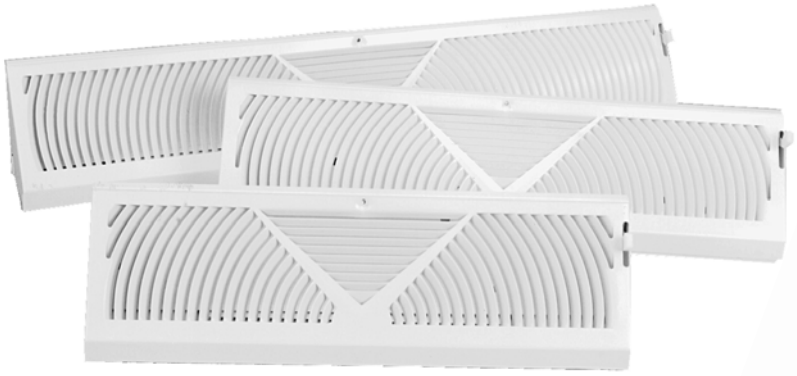

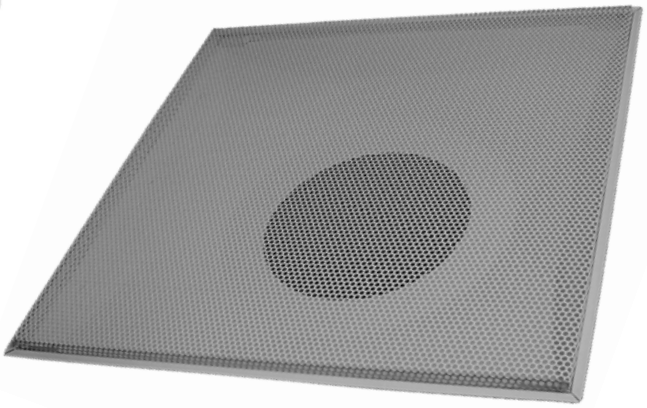

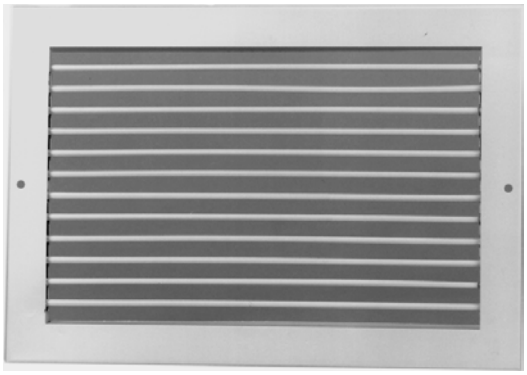

Recommended Velocities/Noise Criteria Chart

RECOMMENDED VELOCITIES

The sound caused by an air outlet in operation is directly proportional to the velocity of the air passing through it. By selecting outlets of proper sizes, air velocities can be controlled within safe sound limits.

The following recommended outlet velocities are within safe sound limits for most applications.

APPLICATIONS	RECOMMENDED VELOCITIES
Apartments	500-750 fpm
Broadcasting studios	500 fpm
Churches	500-750 fpm
General offices	1200-1500 fpm
Hotel bedrooms	500-750 fpm
Industrial buildings	1500-2000 fpm
Legitimate theaters	500-1000 fpm
Motion picture theaters	1000-1250 fpm
Private offices, acoustically treated	500-1000 fpm
Private offices, not treated	1000-1250 fpm
Residences	500-750 fpm
Stores, main floors	1500 fpm
Stores, upper floors	1500 fpm

NOISE CRITERIA CHART

	COMMUNICATION ENVIRONMENT	TYPICAL OCCUPANCY
BELOW NC 25	Extremely quiet environment; suppressed speech is quite audible; suitable for acute pickup of all sounds	Broadcasting studios, concert halls, music rooms
NC 30	Very quiet office; suitable for large conferences; telephone use satisfactory	Residences, theaters, libraries, executive offices, directors' rooms
NC 35	Quiet office; satisfactory for conference at a 15 ft. table; normal voice 10-30 ft.; telephone use satisfactory	Private offices, schools, hotel rooms, courtrooms, churches, hospital rooms
NC 40	Satisfactory for conferences at a 6-8 ft. table; normal voice 6-12 ft.; telephone use satisfactory	General office, labs, dining rooms
NC 45	Satisfactory for conferences at a 4-5 ft. table; normal voice 3-6 ft.; raised voice 6-12 ft.; telephone use occasionally difficult	Retail stores, cafeterias, lobby areas, large drafting & engineering offices, reception areas
ABOVE NC 50	Unsatisfactory for conference of more than two or three persons; normal voice 1-2 ft.; raised voice 3-6 ft.; telephone use slightly difficult	Computer rooms, stenographic pools, print machine rooms, process areas

NC= Noise Criteria rating. NC is based on 10db room absorption (ref. 10-12 watts). • Tested in accordance with ASHRAE 36-72, ADC 1062; GRD84 and ISO 3741.

Terms & Definitions

REGISTER- A grille which is equipped with a damper or control valve, and which directs air in a non-spreading jet.

DAMPER - A device used to control the volume of air passing through a duct by varying the cross-sectional area.

DIFFUSER- An outlet discharging supply air in a spreading pattern.

GRILLE - A louvered covering for an opening through which air passes.

RETURN - Any opening through which air is removed from a conditioned space.

CORE AREA - The total plane of the portion of a grille, face or register bounded by a line tangent to the outer opening through which air can pass. The core area is less than the register size. Example: A 14 x 8 register may have a core that is 1" less than the listed size; therefore the core area is 13 x 7 = 91 sq. in.

FREE AREA - The actual measured perpendicular area between the fins of a grille or register which air can pass through.

EFFECTIVE AREA (AK) - The calculated area of an outlet based on the average measured velocity between the fins.

OUTLET VELOCITY - The average velocity of air emerging from the outlet measured in the plane of the outlet in feet per minute (fpm).

JET VELOCITY - The average measured velocity of air passing between the fins.

C.F.M. - A measure of volume of air in cubic feet per minute.

F.P.M. - A measure of air velocity in feet per minute.

TOTAL PRESSURE (PT) - The sum of the velocity and static pressures measured in inches of water.

STATIC PRESSURE (PS) - The outward force of air within a duct measured in inches of water.

VELOCITY PRESSURE (PV) - The forward moving force of air measured in inches of water.

PRESSURE LOSS (WG) - The term used in the register industry to indicate how much total pressure is required to move air through a register.

TERMINAL VELOCITY - The point at which the discharged air from an outlet decreases to a given speed, generally accepted as 50 feet per minute.

THROW - The distance, measured in feet, that the air stream travels from the outlet to a point where the terminal velocity of 50 feet per minute occurs.

RADIUS OF DIFFUSION - The horizontal distance (in feet) from the diffuser to a point where the terminal velocity of 50 feet per minute occurs.

SPREAD - The maximum total width (in feet) of the air pattern at the point of terminal velocity.

DROP - The vertical distance (in feet) between the base of an outlet and the bottom of the air stream at the end of the horizontal throw.

INDUCTION - The process of drawing room air into the projected air stream because of the velocity of the projected air stream (sometimes called aspiration).

NOISE CRITERIA (NC) - a single number noise rating system that indicates what broad band, continuous sounds are reasonably acceptable.

OVER A CENTURY OF QUALITY

PROUDLY MADE IN THE U.S.A.

Continental Industries, Inc.

Ship to address: 100 West Windsor Avenue • Elkhart, IN 46514
Bill to address: P.O. Box 1248 • Elkhart, IN 46515-1248
Ph: 574-262-4511 • Toll Free 800-735-5272 • Fax 574-262-2075
www.TheRegisterPeople.com • e-mail: crc@TheRegisterPeople.com

INDUSTRY BAR CODE ALLIANCE MEMBER

MEMBER AIR-CONDITIONING & REFRIGERATION WHOLESALERS ASSOCIATION Excellence in Distribution

NORTHAMERICAN HEATING, REFRIGERATION AND AIRCONDITIONING WHOLESALERS ASSOCIATION ASSOCIATE MEMBER

10IP1104